Aligned to DBE Revised ATPs

Platinum

Physical Sciences

Navigation pack

FET PHASE
GRADE 11

Platinum

Physical Sciences

Pearson

FET PHASE
GRADE 11

Pearson South Africa (Pty) Ltd

4th floor, Auto Atlantic Building, Corner of Hertzog Boulevard and Heerengracht, Cape Town, 8001

Offices in Johannesburg, Durban, East London, Polokwane, Bloemfontein, Rustenburg and Mbombela.

Grade 11 Physical Sciences Navigation Pack
Print ISBN: 9781485720454
Print GUID: E2548A31-2EE6-40A5-A15C-F06D5D6A6188
EPDF ISBN: 9781485720492
EPDF GUID: E56F0D8B-3C8D-4959-88C2-593BDB71EAD3

Cover design by Pearson Media Hub

Typesetting by Alicia Arntzen, The Purple Turtle Publishing cc

MyPedia Assessments Grade 11 Physical Sciences, Richard Wabwire, (Ed) 2019. Reprinted by permission of Pearson South Africa Pty (Ltd).

Contents

Find us online

Pearson

We remain committed to support you and continue to provide great service to our valued partners in education.

Visit **za.pearson.com** for product information, educational news, access catalogues or to contact your Pearson key account manager to assist you on your teaching journey.

Classroom Solutions

Classroom Solutions was designed to help save you time, so you can spend more time getting creative about learning. Join a growing community of teachers and access free teaching resources for Grade R to 12, such as lesson plans, worksheets, videos, podcasts and more.

Register for free at **classroomsolutions.co.za**

Pearson eStore

Pearson offers the widest range of CAPS-approved content in South Africa, available in various eBook formats to suit you and your learners' needs.

Browse and purchase eBooks at **shop.pearson.co.za**

Pearson

Dear Teacher

The National State of Disaster due to the COVID-19 pandemic has resulted in the disruption of Education in South Africa and the loss of valuable teaching time and disruption of the school calendar.

As a result of this, the DBE has created and released revised Annual Teaching Plans (ATPs) to assist schools and teachers in ensuring the 2021 school year is completed. The 2021 ATPs are based on the revised ATPs that were developed in 2020. It is important to note that fundamental and core topics are retained in the 2021 ATPs. Some of the strategies that have been used in the process of developing the 2021 DBE ATPs are:

- reduction of content covered in certain topics
- merging of topics
- deleting topics
- revising the assessment guidelines
- reduction in teaching time for certain topics
- resequencing of topics/concepts

At Pearson South Africa, we believe that education is the key to every individuals' success. To ensure that despite the challenges, teachers and learners can meet all the necessary learning outcomes for the year, we have created the Navigation Guide, a free resource to support teachers and learners during this challenging time.

The Navigation Pack aims to summarise and highlight the changes in the 2021 DBE ATP and provide teachers and learners with worksheets that focus on impacted topics in the curriculum.

Due to resequencing of topics, the order of topics in the textbook that is currently used in the classroom may not be aligned to the new sequence of topics in the ATP. Pearson has included page numbers from one of our tried and tested series, Platinum, to guide the teacher and learners as they navigate through the textbook, with the 2021 ATP. The Navigation Pack has a set of assessments based on the Section 4 changes and the revised assessment guidelines.

COVID-19 safety guidelines for teachers and learners

Gatherings at school

Where schools are open for learning, it is up to management to take decisive action to ensure sites are not simultaneously used for other functions such as shelters or treatment units in order to reduce the risk.

Implement social distancing practices that may include:

- A staggered timetable, where teachers and learners do not arrive/leave at the same time for the beginning and end of the school day.
- Cancelling any community meetings/events such as assemblies, cake sales, market day, tuckshop, after-care classes, matric dance, Eisteddfod and other events.
- Cancelling any extra-mural activities such as ballet classes, swimming lessons, sport games, music class and other events that create a crowd gathering.
- Teaching and modelling creating space and avoiding unnecessary touching.
- Limiting movement and interaction between classes.
- Schools with an established feeding scheme plan are to ensure that hygiene and social distancing is always implemented. Teachers and staff members assisting with food distribution are to wear masks, sanitise prior to issuing food items and learners are to stand 1,5m apart in the queue.

Wear a mask at all times.

1. Restrooms/toilets

Hand washing

Washing hands with soap or using alcohol-based hand sanitisers is one of the most important ways to help everybody stay healthy at school. Critical to this is preparing and maintaining handwashing stations with soap and water at the toilet and in each classroom.

Teachers and learners should always wash their hands after:

- eating
- entering the classroom
- using the toilet
- blowing your nose or coughing
- touching tears, mucous, saliva, blood or sweat.

2. Premises and classroom setting

When schools open, classroom settings should be altered in order to promote hygiene, safety and social distancing.

Changed classroom settings may include:

- Cleaning and disinfecting school buildings, classrooms and especially sanitation of facilities at least once a day, particularly surfaces that are touched by many people (railings, lunch tables, sports equipment, door and window handles, toys, teaching and learning tools, etc.).
- Ensuring the proper ventilation and fresh flow of air through classrooms.
- Providing learners with vital information about how to protect themselves by incorporating the importance of hygiene, handwashing and other measures of protecting themselves, into the lessons.
- Promoting best handwashing and hygiene practices and providing hygiene supplies.

- Prepare and maintain handwashing stations with soap and water, and if possible, place alcohol-based hand sanitisers in each classroom, at entrances and exits, and near lunchrooms and toilets.

- Ensure teachers and learners wear a mask at all times.

Social distancing

- Space the learners out in the classroom (or outdoors) – try to keep learners separated by a minimum of 1,5m.

- Create space for learner's desks to be at least 1,5m apart
- Learners should not share cups, eating utensils, or food
- Do not let learners eat items that fall on the floor or chew on pencils or other objects
- Learners are not to exceed 30 per class or 50% of original class size

- Avoid close contact, like shaking hands, hugging or kissing

3. Social behaviour

It is extremely vital during a pandemic that focus is not only directed towards optimal physical health and hygiene but finding ways to facilitate mental health support.

- Treat everybody with respect and empathy – no teasing about COVID-19.
- Encourage kindness towards each other and avoid any stereotyping when talking about the virus.
- Stay home if you have a temperature or are ill.
- Do not touch people who are ill, but be empathetic.

Wear a mask at all times.

How to use this Navigation Pack

Revised DBE Teaching Plan: Comprehensive summary of the CAPS topics according to the revised ATPs.

Navigation Plan: Link to the Platinum series, as well as additional resources in the Navigation Pack.

REVISED DBE ANNUAL TEACHING PLAN				NAVIGATION PLAN	
Themes	**Topic**	**Unit**	**Time**	**Links to Platinum series and Pearson Navigation Pack**	**Page reference**
WAVES, SOUND AND LIGHT	Electromagnetic radiation [9 hrs] *10	The nature of electromagnetic radiation	2 hrs	Plat LB Plat TG	Page 84–90 Page 46–48
		The electromagnetic spectrum	3 hrs		
		The electromagnetic radiation as particle – Photon	4 hrs	Navigation Pack: Targeted Worksheet 1	Page 15
	Consolidation and revision [16 hrs]		16 hrs		
HYDROSPHERE *11					
ASSESSMENT		End of year exam		Navigation Pack: Paper 1 Physics	Page 45
		End of year exam		Navigation Pack: Paper 2 Chemistry	Page 56
TOTAL HOURS = 25					

*10 This topic has been moved from term 1 to term 4. This topic is on pages 84–90 in the Platinum LB, and pages 46–48 in the Platinum teacher's guide book.

*11 The whole topic has been removed.

Assessments for the Term as per the revised ATPs and the Section 4 amendments.

Link to a targeted worksheet in the Navigation Pack, that focus on impacted or challenging topics in the curriculum.

Footnotes provide any additional information.

Link to an exemplar assessment in the Navigation Pack, that was created with Section 4 and curriculum changes in mind.

Navigation Guide

FET PHASE

Physical Sciences

GRADE	NO OF WEEKS	CONTENT, CONCEPTS & SKILLS (WEEKS)	FORMAL ASSESSMENT (WEEKS)
10	40	36	4
11	40	36	4
12	40	29	11

*4 hours teaching time per week, with 40 weeks per grade, means the total teaching time per year is 160 hours

THEME	GRADE 10	GRADE 11	GRADE 12
PHYSICS: MECHANICS	Introduction to vectors and scalars, Motion in one dimension, Energy [32 hours]	Vectors in two dimensions, Newton's Law and Application of Newton's Laws [26 hours]	Momentum and Impulse, Vertical projectile motion in one dimension, Work, Energy and Power [25 hours]
PHYSICS: WAVES, SOUND & LIGHT	Transverse pulses on a string or spring, Transverse waves, Longitudinal waves, Sound, Electromagnetic radiation [17 hours]		Doppler Effect [6 hours]
PHYSICS: ELECTRICITY & MAGNETISM	Magnetism, Electrostatics, Electric circuits [14 hours]	Electrostatics, Electromagnetism, Electric circuits [26 hours]	Electric circuits, Electrodynamics [13 hours]
CHEMISTRY: MATTER & MATERIALS	Revise matter and classification, States of matter and the kinetic molecular theory, Atomic structure, Periodic table, Chemical bonding [24 hours]	Atomic combinations, Intermolecular forces, Ideal gases [21 hours]	Optical phenomena and properties of materials**, Organic chemistry, Organic macromolecules [19 hours]
CHEMISTRY: CHEMICAL CHANGE	Physical and chemical change, Representing chemical change, Reactions in aqueous solutions, Quantitave aspects of chemical change,Stoichiometry [15 hours]	Stoichiometry, Energy and chemical change, Types of reactions [29 hours]	Reaction rate, Chemical Equilibrium, Acids and bases, Electrochemical reactions [27 hours]

**physics content

Term 1

REVISED DBE ANNUAL TEACHING PLAN				NAVIGATION PLAN	
THEMES	**TOPICS**	**UNITS**	**TIME**	**LINKS TO PLATINUM SERIES AND PEARSON NAVIGATION PACK**	**Page reference**
MECHANICS	Vectors in two dimensions [8 hours][1]	Unit 1: Resultant of perpendicular vectors	6 hours	• Plat LB • Plat TG	• Page 2–9 • Page 4–5
		Unit 2: Resolution of vectors into perpendicular components; Resultant of vectors using components	2 hours	• Plat LB • Plat TG	• Page 10–13 • Page 6–7
	Newton's laws [18 hours][2]	Unit 1: Different kinds of forces	3 hours	• Plat LB • Plat TG	• Page 15–22 • Page 10–13
		Unit 2: Force diagrams and free-body diagrams	2 hours	• Plat LB • Plat TG	• Page 23–26 • Page 14–15
		Unit 3: Newton's three laws of motion	10 hours	• Plat LB • Plat TG	• Page 27–39 • Page 16–22
		Unit 4: Newton's Law of Universal Gravitation	3 hours	• Plat LB • Plat TG	• Page 40–45 • Page 23–24
MATTER & MATERIALS	Atomic combinations: molecular structure [7 hours][3]	Unit 1: Describing a chemical bond	4 hours	• Plat LB • Plat TG	• Page 52–61 • Page 35–36
		Unit 2: Molecular shape as predicted by the Valence Shell Electron Pair Repulsion theory	Removed	• Plat LB • Plat TG	• Page 62–66 • Page 37–38
		Unit 3: Electronegativity of atoms to explain the polarity of bonds	2 hours	• Plat LB • Plat TG	• Page 67–71 • Page 39–41
		Unit 4: Bond energy and bond length	1 hour	• Plat LB • Plat TG	• Page 72–75 • Page 42
		Experiment: Newton's Second Law of Motion[4]		• Plat LB • Plat TG	• Page 30–31 • Page 18–20
TOTAL HOURS = 33					

1 Time increased from 4 to 8 hours.

2 Time reduced from 23 to 18 hours.

3 Time increased from 6 to 7 hours.

4 50 marks, min. 2 hours. 12,5% of assessment tasks.

Term 2

REVISED DBE ANNUAL TEACHING PLAN				NAVIGATION PLAN	
THEMES	**TOPICS**	**UNITS**	**TIME**	**LINKS TO PLATINUM SERIES AND PEARSON NAVIGATION PACK**	**Page reference**
MATTER AND MATERIALS	Intermolecular forces [6 hours][5]	Unit 1: Types of intermolecular forces	4 hours	• Plat LB • Plat TG	• Page 77–85 • Page 46–50
		Unit 2: Effect of intermolecular forces	2 hours	• Plat LB • Plat TG	• Page 86–89 • Page 51–52
		Unit 3: The chemistry of water	Removed	• Plat LB • Plat TG	• Page 90–98 • Page 53–57
WAVES, SOUND AND LIGHT	Geometrical optics		Removed	• Plat LB • Plat TG	• Page 104–119 • Page 63–73
WAVES, SOUND AND LIGHT	Two-dimensional and three-dimensional wavefronts		Removed	• Plat LB • Plat TG	• Page 122–132 • Page74 –77
CHEMICAL CHANGE	Quantitative aspects of chemical change[16 hours][6]	Unit 1: Molar volume of gases and concentration of solutions	6 hours	• Plat LB • Plat TG	• Page 160–168 • Page 90–92
		Unit 2: More complex stoichiometric calculations	6 hours	• Plat LB • Plat TG	• Page 169–179 • Page 92–97
		Unit 3: Volume relationships in gaseous reactions	4 hours	• Plat LB • Plat TG	• Page 180–181 • Page 97–98
ELECTRICITY & MAGNETISM	Electrostatics [11 hours][7]	Unit 1: Coulomb's Law	4 hours	• Plat LB • Plat TG	• Page 188–192 • Page 106–107
		Unit 2: Electric field	7 hours	• Plat LB • Plat TG	• Page 193–195 • Page 108
ASSESSMENTS		Control Test[8]		• Term 2 Control Test	• Page 32–35
TOTAL HOURS = 33					

5 Moved from term 1, time reduced from 10 to 5 hours.

6 Time increased from 12 to 16 hours.

7 Moved from term 3, time increased from 6 to 11 hours.

8 No exam. 100 marks, 2 hours. 25% of assessment tasks.

Term 3

REVISED DBE ANNUAL TEACHING PLAN				NAVIGATION PLAN	
THEMES	**TOPICS**	**UNITS**	**TIME**	**LINKS TO PLATINUM SERIES AND PEARSON NAVIGATION PACK**	**Page reference**
ELECTRICITY & MAGNETISM	Electromagnetism [8 hours][9]	Unit 1: Magnetic field associated with current-carrying wires	4 hours	• Plat LB • Plat TG	• Page 197–200 • Page 112
		Unit 2: Faraday's Law[10]	4 hours	• Plat LB • Plat TG • Navigation Pack: Targeted Worksheet 2	• Page 201–206 • Page 113–115 • Page 19–21
ELECTRICITY & MAGNETISM	Electric circuits [11 hours][11]	Unit 1: Ohm's Law	4 hours	• Plat LB • Plat TG	• Page 208–212 • Page 118–119
		Unit 2: Electrical energy and power	7 hours	• Plat LB • Plat TG	• Page 213–216 • Page 120–121
MATTER AND MATERIALS	Ideal gases and thermal properties [8 hours][12]	Unit 1: The kinetic theory of gases and motion of particles	2 hours	• Plat LB • Plat TG	• Page 136–138 • Page 81
		Unit 2: Boyle's Law[13]	4 hours	• Plat LB • Plat TG	• Page 139–146 • Page 82–83
		Unit 4: Comparing ideal gases with real gases	2 hour	• Plat LB • Plat TG • Navigation Pack: Targeted Worksheet 1	• Page 151–152 • Page 85 • Page 16–18
CHEMICAL CHANGE	Energy and chemical change[4 hours]	Unit 1: Energy changes in reactions related to bond energy changes	1 hour	• Plat LB • Plat TG	• Page 224–231 • Page 129–134
		Unit 2: Exothermic and endothermic reactions	2 hours	• Plat LB • Plat TG	• Page 232–233 • Page 134–135
		Unit 3: Activation energy	1 hour	• Plat LB • Plat TG	• Page 234–236 • Page 136

9 Time increased from 6 to 8 hours.

10 Removed: All calculations on electromagnetism.

11 Time increased from 8 to 11 hours.

12 Moved from term 2.

13 Removed: Charles's, Gay Lussac's and ideal gas law.

Term 3

REVISED DBE ANNUAL TEACHING PLAN				NAVIGATION PLAN	
THEMES	TOPICS	UNITS	TIME	LINKS TO PLATINUM SERIES AND PEARSON NAVIGATION PACK	Page reference
CHEMICAL CHANGE	Types of reaction I [4 hours]	Unit 1: Acid-base reactions	4 hours	• Plat LB • Plat TG	• Page 238–244 • Page 140
ASSESSMENTS		Control Test[14]		• Navigation Pack: Term 3 Control Test	• Page 36–41
		Experiment: Boyle's Law[15]		• Plat LB • Plat TG	• Page 140–141 • Page 82–83
TOTAL HOURS = 35					

14 100 marks, 2 hours. 25% of assessment tasks.

15 50 marks, min. 2 hours. 12,5% of assessment tasks.

Term 4

REVISED DBE ANNUAL TEACHING PLAN				NAVIGATION PLAN	
THEMES	TOPICS	UNITS	TIME	LINKS TO PLATINUM SERIES AND PEARSON NAVIGATION PACK	Page reference
CHEMICAL CHANGE	Types of reaction I [3 hours]	Unit 1: Acid-base reactions continued	3 hours	• Plat LB • Plat TG	• Page 244–248 • Page 140–142
	Types of reaction II [6 hours][16]	Unit 1: Redox reactions[17]	4 hours	• Plat LB • Plat TG • Navigation Pack: Targeted Worksheet 3	• Page 250–261 • Page 146–152 • Page 22–24
		Unit 2: Oxidation numbers	2 hours	• Plat LB • Plat TG	• Page 262–263 • Page 153
CHEMICAL SYSTEMS	Exploiting the lithosphere		Removed	• Plat LB • Plat TG	• Page 270–290 • Page 158–168
ASSESSMENTS		FINAL Exam		• Navigation Pack: Examplar Assessment Final Examination Paper 1[18]	• Page 42–46
				• Navigation Pack: Examplar Assessment Final Examination Paper 2[19]	• Page 47–51
TOTAL HOURS = 9					

17 Time increased from 12 to 13 hours.

18 No balancing of redox reactions using oxidation numbers via the ion-electron method. Balance redox reactions by using half-reactions from the Table of Standard Reduction Potentials.

19 100 marks, 12,5% of assessment tasks.

20 100 marks, 12,5% of assessment tasks.

Targeted Worksheets

Targeted Worksheet 1

Topic: Ideal gases and thermal properties

TARGETED WORKSHEET	TOPIC IN CAPS
1	Ideal gases and thermal properties
2	Electromagnetism
3	Types of reactions: Redox reactions

Content summary

This topic is covered in the Platinum textbook from page 136–152. Excluded from the ATP is page 145–150.

Ideal gases and thermal properties have been moved from term 2 to term 3. Charles' Law, Gay Lussac's Law and the Ideal Gas Law are all removed from this topic. It is therefore necessary to limit all calculations to problems where the temperature and the mass of the gas remain constant.

Although the Kinetic Theory remains part of the topic, only Boyle's Law needs to be explained in terms of it. Boyle's law is the prescribed formal practical for term 3. Since the other laws are removed but the same amount of time is allocated to the topic, more time can be spent in preparation for the practical.

Ideal gases remain part of the content of this topic. Students need to identify the differences between ideal gases and real gases. This identification includes the comparison of graphs for ideal and real gases.

The description of the temperature of a gas in terms of the average kinetic energy of the molecules and pressure exerted by a gas explained in terms of collisions between molecules and the walls of the container, remains part of this topic.

Targeted Worksheet 1

Time: 30 minutes

Topic: Ideal gases and thermal properties

Name: **Surname:**

Instructions and information

1. Answer all of the questions.

1. Define:
   1.1 Temperature (2)
   1.2 Ideal gas (2)
   1.3 Pressure (2)
   1.4 Boyle's Law (2)
2. The volume and pressure of a car tyre before it starts a journey are 50 dm^3 and 120 kPa, respectively. When the tyre had cooled to the original temperature, the pressure decreased to 100 kPa. Calculate the new volume of the tyre. (3)
3. An investigation was done to determine the relationship between the pressure and volume of a fixed mass of gas. The table below shows the results of the investigation.

Pressure (kPa)	Volume (cm^3)
25,00	5
12,50	10
6,25	20
5,00	25
4,20	30
3,50	35

   3.1 Use the results to draw a graph of volume versus pressure. (3)
   3.2 Apart from the mass of the gas, which physical quantity needs to be kept constant during this investigation? (2)
   3.3 Write down a mathematical expression, in symbols, for the relationship between the variables in the graph. (2)
   3.4 Which law describes the relationship between pressure and volume of a fixed amount of gas? (2)
   3.5 Use the kinetic theory of gases to explain the results of the investigation. (2)
   3.6 Calculate the volume of the gas, in cm^3, if the pressure exerted on the gas is 35,00 kPa. (4)
   3.7 The investigation is repeated, but this time at a higher temperature. What is the temperature an indication of? (1)
   3.8 Write down TWO conditions under which the gas used will behave like an ideal gas. (2)

4.1 List 3 properties of ideal gasses that are not true for real gases. (3)

4.2 Under which conditions will real gases obey Boyle's Law? (2)

5.1 In which one of the graphs shown does the dotted line correctly represent the deviation of the behaviour of a real gas from an ideal gas?

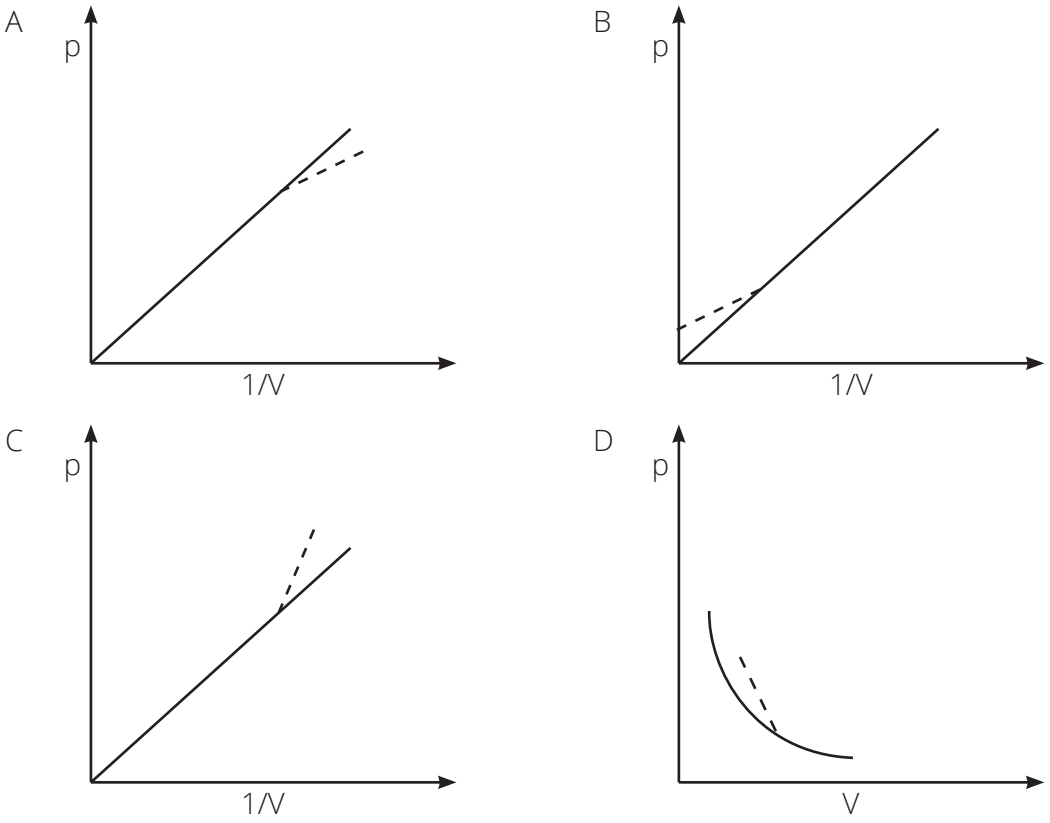

(2)

5.2 The density of a fixed amount of a molecular substance increases when ...

A the distance between the molecules increases

B molecules lose kinetic energy

C intermolecular forces between the molecules are overcome

D the pressure the molecules exert decreases (2)

5.3 Which of the following is NOT a property of ideal gases at –273 K? The particles ...

A have no volume

B have no kinetic energy

C have no mass

D exert no pressure (2)

Total: [40]

Targeted Worksheet 2

Topic: Electromagnetism

Name: **Surname:**

Content summary

This topic is covered in the textbook from page 197–206. Excluded from the ATP are all calculations on page 202 and page 204–206.

All calculations involving the formulas $\Sigma = -N = \frac{\Delta\Phi}{\Delta t}$ and $\Phi = BA\cos\theta$ are removed and time allocated is increased from 6 hours to 8 hours.

The following content remains:

- Magnetic fields and field lines around straight current conductors, single loop conductors and solenoids.
- The Right Hand Rule and its application to the direction of magnetic fields of straight current conductors, single loop conductors and solenoids.
- The qualitative discussion of the environmental impact of overhead electrical cables.
- Faraday's Law.
- The description in words and pictures of what happens when a bar magnet moves in and out of a solenoid connected to a galvanometer.
- Using the Right Hand rule to determine the direction of the induced current in a solenoid when the north or south pole of a magnet is inserted or pulled out of the solenoid.

Targeted Worksheet 2

Time: 45 minutes

Topic: Electromagnetism

Name: **Surname:**

Instructions

1. Answer all questions.

1. Define each of the terms below.
   1.1 Magnetic flux (2)
   1.2 Magnetic induction (2)
   1.3 Right Hand Rule (2)
   1.4 Faraday's law (2)
2. Draw the magnetic field associated with each of the following conductors.
   2.1  (1)
   2.2  (1)
   2.3  (5)
   2.4 (3)

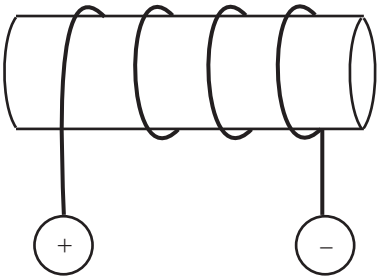

3. The north pole of a magnet is pushed into the solenoid, as shown in the diagram below.

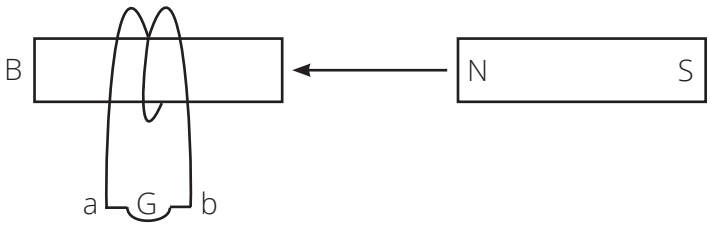

For each of the situations described below, determine whether the galvanometer showed any movement. Write only 'yes' or 'no'.

3.1 The magnet was moved out of the solenoid. (1)

3.2 The solenoid was moved away from the magnet. (1)

3.3 Both the magnet and the solenoid were held stationary. (1)

4. The north end of a bar magnet is passed from left to right through the coils of a solenoid. The solenoid is connected to a sensitive galvanometer, which is able to register the direction of a current when it flows.

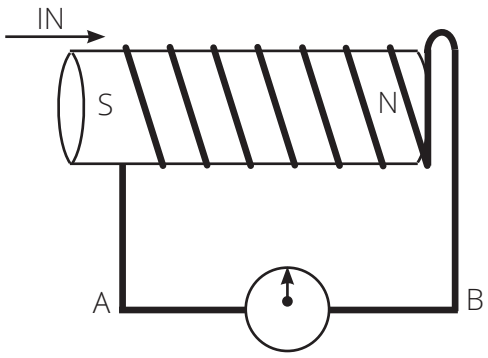

4.1 When the north pole of the bar magnet is introduced into the coils of the solenoid, a current flows in the solenoid.

4.1.1 Explain why a current is induced in the solenoid when the bar magnet is moved relative to the solenoid. (2)

4.1.2 Which law accounts for the induction of emf, and thus current? (1)

4.1.3 In which direction does the current flow through the galvanometer: from A to B, or from B to A? (1)

4.1.4 Which law is used to determine the direction in which the current flows? (1)

4.1.5 Explain how you could demonstrate the presence and direction of the magnetic field around the copper wire. (3)

4.2 The bar magnet is pulled out of the solenoid on the right-hand side. In which direction will the current now flow through the galvanometer: from A to B or from B to A? (1)

4.3 A solenoid is one of the main components of an electromagnet.

4.3.1 Give TWO modifications that can be made to the above solenoid to convert it into an electromagnet. (2)

4.3.2 State two advantages of electromagnets over permanent magnets. (2)

4.3.3 List four applications of electromagnets. (4)

4.3.4 Write down two negative consequences of overhead power cables. (2)

Total: [40]

Targeted Worksheet 3

Time: 30 minutes

Topic: Types of reactions: Redox reactions

Content summary

This topic is covered in pages 250–264 in the Platinum Learner's Book. Page 260–261 is excluded from the ATP.

This topic is amended by replacing the balancing of redox reactions with the use of oxidation numbers via the ion-electron method with balancing redox reactions with half-reactions from the Table of Standard Reduction Potentials.

In order to do this, students must be introduced to the Table of Standard Reduction Potentials and how to use it. The time allocation for this topic is increased from 12 to 13 hours in which this can be achieved. The grade 11 textbook does not include a copy of the Table of Standard Reduction Potentials. Refer to page 389 of the grade 12 Platinum textbook.

Although oxidation numbers are not used for balancing purposes, the meaning of oxidation numbers and the assigning of such numbers to atoms remains part of the ATP. Oxidation numbers are used to recognise redox reactions.

The terminology of redox reactions remains a part of the ATP. This includes the terms reduction, oxidation, reducing agent, oxidising agent and redox reaction.

Targeted Worksheet 3

Time: 2 hours

Topic 13: Types of reactions: Redox reactions

Name: **Surname:**

Instructions and information

1. Answer all questions.

1. Define the following terms:
   1.1 Reduction (2)
   1.2 Oxidation (2)
   1.3 Reducing agent (2)
   1.4 Oxidising agent (2)
   1.5 Redox reaction (2)
   1.6 Half reaction (2)
2. State the total oxidation number of the following substances.
   2.1 Cu^{2+} (1)
   2.2 H_3O^+ (1)
   2.3 O_2 (1)
   2.4 N^{3-} (1)
   2.5 CO_3^{2-} (1)
3. State the oxidation number for sulfur in each of the following formulas:
   3.1 $Al_2(SO_4)_3$ (1)
   3.2 S_2 (1)
   3.3 H_2S (1)
   3.4 SO_2 (1)
   3.5 S_2F_{10} (1)
4. Which of the following reactions are redox reactions?
   4.1 $H_2SO_4 + 2NaOH \rightarrow Na_2SO_4 + 2H_2O$ (2)
   4.2 $H_2SO_4 + Mg \rightarrow MgSO_4 + H_2$ (2)
   4.3 $3SO_3 + K_2CrO_7 + 2HCl \rightarrow Cr_2(SO_4)_3 + 2KCl + H_2O$ (2)
5. For each of the given reactions identify the ...
   a) substance that is oxidised.
   b) substance that is reduced.
   c) oxidising agent.
   d) reducing agent.
   5.1 $2H_2 + O_2 \rightarrow 2H_2O$ (4)

5.2 $F_{e2}O_3 + 3CO \rightarrow 2Fe + 3CO_2$ (4)

5.3 $2NO + 2CO \rightarrow N_2 + 2CO_2$ (4)

5.4 $5H_2S + 2KMnO_4 + 3H_2SO_4 \rightarrow 5S + 2MnSO_4 + 8H_2O + 2K_2SO_4$ (4)

6. Determine the number of electrons that are required for each of the half reactions given below.

6.1 $Al \rightarrow Al^{3+}$ (1)

6.2 $S + 2H^+ \rightarrow H_2S$ (1)

6.3 $SO_2 + 2H_2O \rightarrow SO_4^{2-} + 4H^+$ (1)

6.4 $MnO^{4-} + 4H_2O \rightarrow MnO_4 + 8H^+$ (1)

7. For each of the given reactions write the ...

a) redox half reaction.

b) oxidation half reaction.

7.1 $Mg + Ni^{2+} \rightarrow Mg^{2+} + Ni$ (4)

7.2 $Zn + 2H^+ + 2Cl^- \rightarrow Zn^{2+} + 2C^{l-} + H_2$ (4)

7.3 $CuO + H_2 \rightarrow Cu + H_2O$ (4)

7.4 $2Fe + 3NiCl \rightarrow 2FeCl_3 + 3Ni$ (4)

7.5 $SO_2 + 2H_2O + I_2 \rightarrow 2HI + H_2SO_4$ (4)

8. For each of the following reactions use the Table of Standard Reduction Potentials and write the ...

a) reduction half-reactions.

b) oxidation half-reactions.

c) net ionic redox reaction.

8.1 $Cr^{3+} + Zn \rightarrow Cr^{2+} + Zn^{2+}$ (6)

8.2 $Sn^{2+} + I_2 \rightarrow Sn^{4+} + 2I^-$ (5)

8.3 $H_2SO_4 + Mg \rightarrow MgSO_4 + H_2$ (5)

8.4 $3SO_3 + K_2CrO_7 + 2HCl \xrightarrow[H_2O]{} Cr_2(SO_4)_3 + 2KCl + H_2O$ (7)

9. Nitric acid and copper react according to the following unbalanced equations:
$HNO_3(aq) + Cu(s) \rightarrow Cu(NO_3)_2 + NO_2(g) + H_2O(l)$

9.1 Write down a net equation using the Table for Standard Reduction Potentials. Show all your steps that lead you to your final answer. (7)

9.2 Give the term that will describe the function of the NO_3^- ion in the reaction. (2)

Total: [100]

Targeted Worksheet 1 Answers

Time: 50 minutes

Topic: Ideal gases and thermal properties

1.1 A measure of the average kinetic energy of all the molecules in that substance.✓✓ (2)

1.2 A hypothetical gas that obeys the general gas equation in all aspects. ✓✓ (2)

1.3 An indication of the force exerted per unit area on a surface as a result of the collisions of the particles of a substance. ✓✓ (2)

1.4 The volume of a given mass of gas is inversely proportional to the pressure exerted on it, provided that the temperature remains constant.✓✓ (2)

2. $p_1V_1 = p_2V_2$ ✓
$120 \times 50 = 100 \times V_2$ ✓
$V_2 = 60\ dm^3$ ✓ (3)

3.1

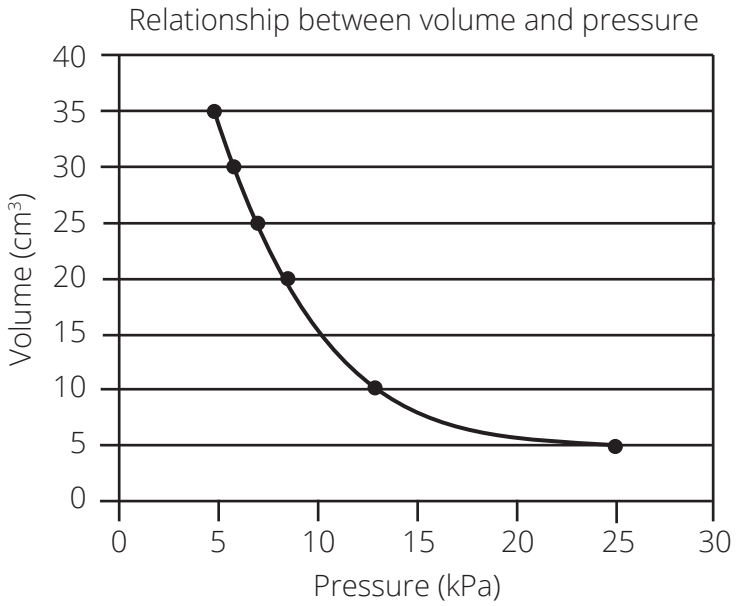

Scales correct✓
Points plotted✓
Line of best fit drawn✓ (3)

3.2 Temperature ✓✓ (2)

3.3 $pa\frac{1}{V}$ OR $Va\frac{1}{p}$ ✓ (2)

3.4 Boyle's Law ✓✓ (2)

3.5 As the volume of the container decreases, ✓ the number of collisions per unit area on the walls of the container increases. ✓ (2)

3.6 $p_1V_1 = p_2V_2$ ✓
(25)(5) ✓= (35)V_2 ✓ (any pair of coordinates)
$V_2 = 3{,}57\ cm^3$ ✓ (answers may differ slightly if another pair of coordinates were used) (4)

3.7 Temperature is an indication of the average kinetic energy of all the particles. ✓ (1)

3.8 High temperature; ✓ low pressure ✓ (2)

4.1 The particles of ideal gases …

- do not contribute to the volume of the gas. ✓
- exert no forces on one another. ✓
- experience perfectly elastic collisions . ✓ (3)

4.2 Low pressure ✓ and high temperatures. ✓ (2)

5.1 A ✓✓ (2)

5.2 B ✓✓ (2)

5.3 C ✓✓ (2)

Total: [40]

Targeted Worksheet 2 Answers

Time: 45 minutes

Topic: Electromagnetism

1.1 The number of field lines passing through a given area ✓✓ (2)

1.2 The process of producing an emf over the points of a conductor when it is placed in a changing magnetic field. ✓✓ (2)

1.3 Hold the conducting wire in your right hand and point your right thumb in the direction of the conventional current. Your fingers will then point in the direction of the magnetic field.✓✓ (2)

1.4 The induced emf in a conductor is directly proportional to the rate of change of the magnetic flux linkage. ✓✓ (2)

2.1

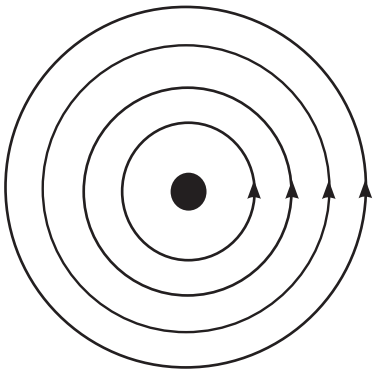

✓

(1)

2.2

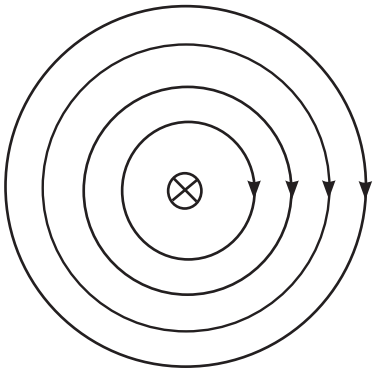

✓

(1)

2.3

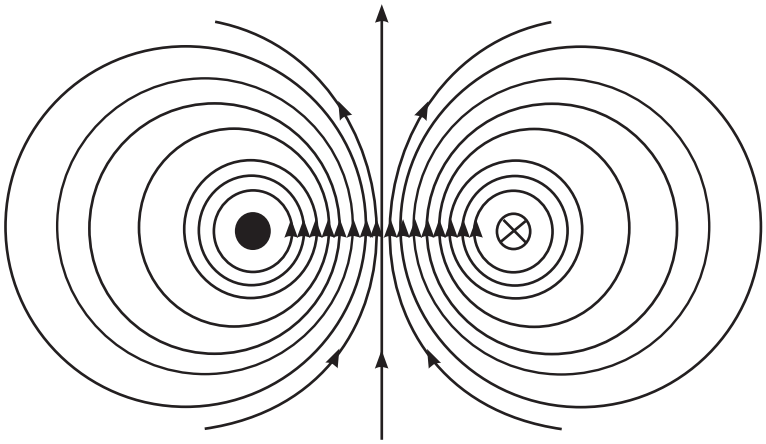

✓ Shape between conductors
✓ Shape on outside of conductors
✓ Direction of field
✓ Field lines closer to each other between conductors
✓ No lines touching (5)

2.4

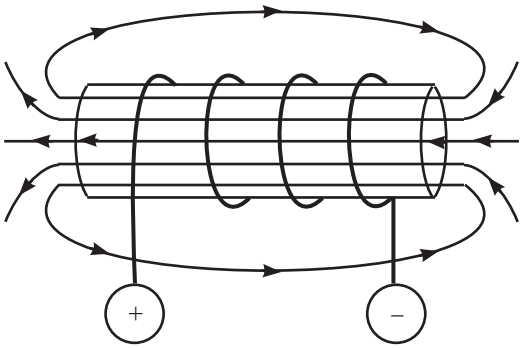

✓ Shape
✓ Lines parallel and evenly spaced inside solenoid
✓ Field direction (3)

3.1 Yes ✓ (1)

3.2 Yes ✓ (1)

3.3 No ✓ (1)

4.1.1 Introducing the magnet changes the magnetic flux linkage with the solenoid. ✓ In order to oppose the change in magnetic flux linkage a current will flow to create an opposing magnetic field. ✓ (2)

4.1.2 Faraday's law of electromagnetic induction ✓ (1)

4.1.3 B to A ✓ (1)

4.1.4 Right-hand rule ✓ (1)

4.1.5 Make a small hole in a piece of cardboard and insert the copper wire into it. ✓ When the current flows, small compasses placed around the wire ✓will indicate the direction of the magnetic field. ✓ (3)

4.2 A to B ✓ (1)

4.3.1 Connect a direct current electrical supply in the place of the galvanometer. ✓ Insert a soft iron core in the solenoid. ✓ (2)

4.3.2 Electromagnets are stronger magnets and they can be switched on/off whenever need arises ✓✓ (2)

4.3.3 Used in:

- Electric motors✓
- Door bells✓
- Relay switches✓
- Lifting Cranes ✓ Any four that are correct. (4)

4.3.4
- Their magnetic fields may be harmful to humans and animals. ✓
- Land cleared to make space for the cables leads to destruction of natural habitats for plants and animals. ✓✓ (2)

Total: [40]

Targeted Worksheet 3 Answers

Time: 2 hours

Topic: Types of reactions: Redox reactions

1.1 Gaining electrons. ✓✓ (2)
1.2 Losing electrons.✓✓ (2)
1.3 Substance that undergoes oxidation and loses electrons.✓✓ (2)
1.4 Substance that undergoes reduction and gains electrons.✓✓ (2)
1.5 Chemical reaction where the transfer of electrons occur.✓✓ (2)
1.6 The part of a chemical reaction that represents either the reduction or oxidation part of the reaction.✓✓ (2)
2.1 +2 ✓ (1)
2.2 +1 ✓ (1)
2.3 0 ✓ (1)
2.4 -3 ✓ (1)
2.5 -2 ✓ (1)
3.1 +6 ✓ (1)
3.2 0 ✓ (1)
3.3 -2 ✓ (1)
3.4 +4 ✓ (1)
3.5 +5 ✓ (1)
4.1 Not a redox reaction✓✓ (2)
4.2 A redox reaction ✓✓ (2)
4.3 A redox reaction ✓✓ (2)
5. (16)

	Oxidised substance	Reduced substance	Oxidising agent	Reducing agent	
5.1	H_2 ✓	O_2 ✓	O_2 ✓	H_2 ✓	(4)
5.2	CO ✓	Fe_2O_3 ✓	Fe_2O_3 ✓	CO ✓	(4)
5.3	CO ✓	NO ✓	NO ✓	CO ✓	(4)
5.4	H_2S ✓	$KMnO_4$ ✓	$KMnO_4$ ✓	H_2S ✓	(4)

6.1 3 ✓ (1)
6.2 2 ✓ (1)
6.3 2 ✓ (1)
6.4 4 ✓ (1)
7.1 a) Red: $Ni^{2+} + 2e^- \rightarrow Ni$ ✓✓
b) Ox: $Mg \rightarrow Mg^{2+} + 2e^-$ ✓✓ (4)
7.2 a) Red: $2H^+ + 2e^- \rightarrow H_2$✓✓
b) Ox: $Zn \rightarrow Zn^{2+} + 2e^-$ ✓✓ (4)

7.3 a) Red: $Cu^{2+} + 2e^- \rightarrow Cu$ ✓✓

b) Ox: $H_2 \rightarrow 2H^+ + 2e^-$ ✓✓ (4)

7.4 a) Red: $Ni^{2+} + 2e^- \rightarrow Ni$ ✓✓

b) Ox: $Fe \rightarrow Fe^{3+} + 3e^-$ ✓✓ (4)

7.5 a) Red: $I_2 + 2e^- \rightarrow 2I^-$ ✓✓

b) Ox: $SO_2 + 2H_2O \rightarrow SO_4^{2-} + 4H^+ + 2e^-$ ✓✓ (4)

8.1 a) Red: $Cr^{3+} + e^- \rightarrow Cr^{2}+$ ✓✓

(×2)✓ $2Cr^{3+} + 2e^- \rightarrow 2Cr^{2+}$

b) Ox: $Zn \rightarrow Zn^{2+} + 2e^-$ ✓✓

c) Net: $2Cr^{3+} + Zn \rightarrow 2Cr^{+2} + Zn^{2+}$ ✓ (6)

8.2 a) Red: $I_2 + 2e^- \rightarrow 2I_-$ ✓✓

b) Ox: $Sn^{2+} \rightarrow Sn^{4+} + 2e^-$ ✓✓

c) Net: $I_2 + Sn^{2+} \rightarrow 2I^- + Sn^{4+}$ ✓ (5)

8.3 a) Red: $2H^+ + 2e^- \rightarrow H_2$ ✓✓

b) Ox: $Mg \rightarrow Mg^{2+} + 2e^-$ ✓✓

c) Net: $2H^+ + Mg \rightarrow H_2 + Mg^{2+}$ ✓ (5)

8.4 a) Red: $Cr_2O_7^{2-} + 14H^+ + 6e^- \rightarrow 2Cr^{3+} + 7H_2O$ ✓✓

b) Ox: $SO_2 + 2H_2O \rightarrow SO_4^{2-} + 4H^+ + 2e^-$ ✓✓

(×3)✓ $3SO_2 + 6H_2O \rightarrow 3SO_4^{2-} + 12H^+ + 6e^-$

c) Net: $Cr_2O_7^{2-} + 2H^+ + 3SO_2 \rightarrow 2Cr^{3+} + H_2O + 3SO_4^{2-}$ ✓✓ (7)

9.1 a) Red: $NO_3^- + 2H^+ + e^- \rightarrow NO_2 + H_2O$✓✓

(×2) ✓ $2NO_3^- + 4H^+ + 2e^- \rightarrow 2NO_2 + 2H_2O$ ✓

b) Ox: $Cu \rightarrow Cu^{2+} + 2e^-$ ✓

c) Net: $2NO_3^- + 4H^+ + Cu \rightarrow 2NO_2 + 2H_2O + Cu^{2+}$ ✓✓ (7)

9.2 Spectator ion✓✓ (2)

Total: [100]

Exemplar Assessments

Exemplar Assessments

Time: 2 hours

Term 2 Control Test

Name: **Surname:**

Instructions and information

1. This question paper consists of 8 questions.
2. Answer ALL the questions.
3. Start EACH question on a NEW page.
4. Number the answers correctly according to the numbering system used in this question paper.
5. Leave ONE line between two sub questions, for example between QUESTION 2.1 and QUESTION 2.2.
6. You may use a non-programmable calculator. You may use appropriate mathematical instruments.
7. Show ALL formulae and substitutions in ALL calculations.
8. Round off your FINAL numerical answers to a minimum of TWO decimal places.
9. Give brief motivations, discussions, et cetera where required.
10. Write neatly and legibly.

Question 1

Multiple choice: Write down the letter of the correct answer next to the question number.

1.1 Which of the following solutes will not dissolve in the given solvent?

A Br_2 in CCl_4

B NaCl in CCl_4

C $MgCl_2$ in H_2O

D H_2O in CH_3CH_2OH (2)

1.2 x dm^3 $H_2(g)$ reacts with an excess $N_2(g)$ at room temperature to form $NH_3(g)$, according to the following balanced equation:

$3H_2(g) + N_2(g) \rightarrow 2NH_3(g)$

The volume (in dm^3) of $NH_3(g)$ that forms is ...

A $\frac{2x}{3}$

B x

C $\frac{3x}{2}$

D $2x$ (2)

1.3 The thermal decomposition of ammonium nitrate is given by the following reaction:

$2NH_4NO_3 \rightarrow 2N_2(g) + 4H_2O(g) + O_2(g)$

This reaction is useful ...

A in deploying air bags

B in fire extinguishers

C in explosives

D when fuel combusts (2)

1.4 Two charges exert a force F on each other. The distance between them is now doubled. What is the new force experienced by the charges?

A F

B $\frac{F}{4}$

C $\frac{F}{2}$

D 4F (2)

1.5 Two charges A and B of magnitudes 2 nC and 5 nC respectively, are placed a certain distance apart. Which of the following is true about the magnitude of the force experienced by each of them?

A B experiences a bigger force than A.

B B experiences a smaller force than A.

C Both A and B experience the same force.

D There is not enough information to compare the forces. (2)

[10]

Question 2

The boiling points of CH_4, H_2S and H_2O are compared and the following results are obtained:

Property	A	B	C
Boiling Point	Medium	High	Low

2.1 Define the following terms:

a) Hydrogen bond (2)

b) London force (2)

c) Dipole-dipole force (2)

2.2 Identify A, B and C. (3)

2.3 Explain your reasoning for the answer given in question 2.2. (9)

[18]

Question 3

To determine if a person has diabetes they are given a glucose solution to drink. This solution is made by adding 50 g glucose ($C_6H_{12}O_6$) to 300 ml water.

3.1 Calculate the concentration glucose in the solution. (7)

Glucose is converted into energy in the cells of the body through respiration.

Glucose + oxygen → carbon dioxide + water + energy

3.2 Write a balanced chemical reaction for respiration. (3)

3.3 How many moles of oxygen is needed to react with 50 g glucose? (3)

3.4 What volume carbon dioxide will be produced at STP when 50 g glucose reacts with oxygen? (3)

[16]

Question 4

A chemical substance consists of 85,71% carbon and 14,29% hydrogen. The molecular mass of the substance is 42 $g{\cdot}mol^{-1}$. What is the molecular formula for this substance?

4.1 Determine the empirical formula for this substance. (5)

4.2 Determine the molecular formula of the substance. (3)

[8]

Question 5

5.1 Define the term limiting reactant. (2)

5.2 16,70 g of I_2O_2 are mixed with 11,2 g of CO and heated to form CO_2 and I_2.

$I_2O_2 + 2CO \rightarrow 2CO_2 + I_2$

5.2.1 Determine which reactant is the limiting reactant. (5)

5.2.2 How many grams of the other reactant are in excess? (4)

[11]

Question 6

Pure $CuSO_4$ is a white substance that turns blue in the presence of water. The following reaction represents this process:

$$\underset{\text{Blue}}{CuSO_4{\cdot}xH_2O} \rightarrow {}_xH_2O + \underset{\text{White}}{CuSO_4}$$

49,90 g blue copper sulfate is heated until 31,90 g pure white copper sulfate remains.

6.1 What is the percentage purity of $CuSO_4$ in the initial blue sample? (2)

6.2 How many moles $CuSO_4$ is present in the blue $CuSO_4$? (4)

6.3 Calculate the value of x in the reaction. (6)

6.4 How many water molecules evaporate? (2)

[14]

Question 7

7.1 State Coulomb's Law in words. (2)

7.2 Two charge spheres, Q_1 and Q_2, experience an attractive force of 25 μN when placed 10 cm apart. If Q_1 = +8 nC, calculate the charge on Q_2. (5)

[7]

Question 8

A test charge (q) of +2 nC is placed in the electric field of a charged object (Q_1) that carries a charge of +8 nC. The strength of this electric field, which the test charge experiences at a distance r from the charged object, is 20 000 N·C^{-1}.

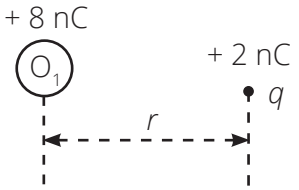

8.1 Define an electric field at a point. (1)

8.2 What makes an object 'positively charged'? (1)

8.3 In which direction is the electric field due to Q_1 at the position of the test charge q: left to right or right to left? (1)

8.4 Calculate the force that the test charge experiences due to the electric field of Q_1. (4)

8.5 Calculate the distance r between the two charges. (3)

A negatively charged object (Q_2) is now placed near the test charge q, as shown in the diagram. The force that the test charge experiences due to the electric field of Q_2 is 6×10^{-5} N.

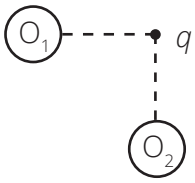

8.6 Determine the net electrostatic force experienced by the test charge q when in the electric fields of Q_1 and Q_2. (Hint: First draw a rough force diagram.) (6)

[16]

Total: [100]

Exemplar Assessments

Time: 2 hours

Term 3 Control Test

Name: **Surname:**

Instructions and information

1. This question paper consists of 7 questions.
2. Answer ALL the questions.
3. Start EACH question on a NEW page.
4. Number the answers correctly according to the numbering system used in this question paper.
5. Leave ONE line between two sub questions, for example between QUESTION 2.1 and QUESTION 2.2.
6. You may use a non-programmable calculator. You may use appropriate mathematical instruments.
7. Show ALL formulae and substitutions in ALL calculations.
8. Round off your FINAL numerical answers to a minimum of TWO decimal places.
9. Give brief motivations, discussions, et cetera where required.
10. Write neatly and legibly.

Question 1

Multiple choice: Write down the letter of the correct answer next to the question number.

1.1 In order for an *emf* to be induced in a solenoid ...

A it must be connected to an alternating current electrical source

B it must be connected to a voltmeter

C there must be a change in the relative magnetic flux linkage across the coils

D the relative magnetic flux linkage must remain constant across the coils (2)

1.2 For a non-ohmic conductor ...

A $V \alpha I$

B T = constant

C

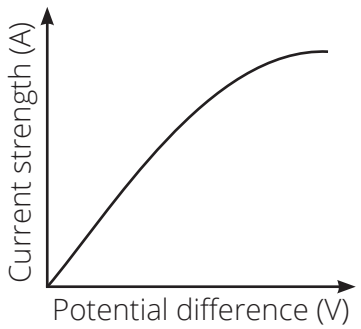

D *R* is constant (2)

1.3 The average kinetic energy of all the molecules in a sample of H^2-gas is used to describe …

A temperature.

B pressure.

C compressibility.

D volume. (2)

1.4 Which graph correctly shows how a real gas will deviate from ideal gas behaviour?

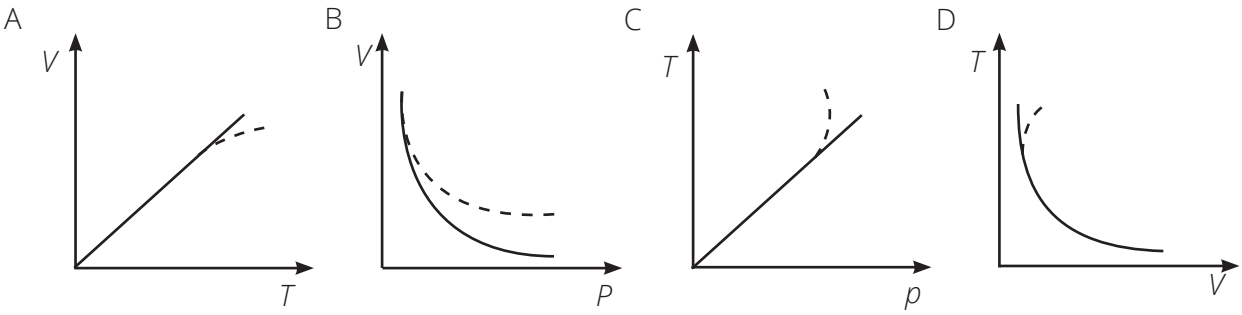

(2)

1.5 Which one of the following reactions is endothermic?

A $2H_2(g) + O_2(g)\ 2H_2O(g)$

B $6CO_2(g) + 6H_2O(l)\ C_6H_{12}O_6(s) + 6O_2(g)$

C C(s) + O2(g) → CO2(g)

D HCl(g) + H2O(l) → H3O+(aq) + Cl→(aq) (2)

[10]

Question 2

2.1.1 Draw the electric field pattern for the conductor shown below.

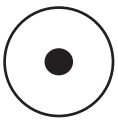

(2)

2.1.2 Which rule did you use to determine the direction of the magnetic field lines? (2)

2.2.1 State Faraday's Law. (2)

2.2.2 Redraw the following diagram and indicate the poles of the induced magnet, the direction of the current in the solenoid, and the direction of the current through the ammeter.

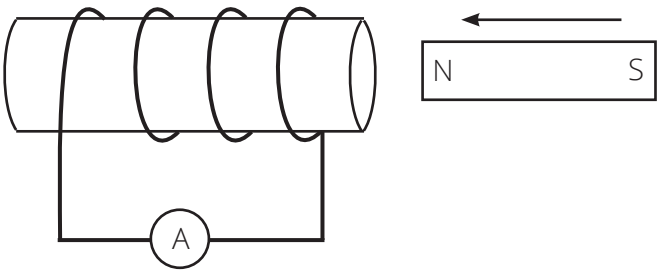

(3)

2.2.3 Draw magnetic field lines to represent the magnetic field in the solenoid. (2)

2.2.4 Explain what will happen to the elctrical current and magnetic field when the magnet is pulled out of the solenoid. (2)

2.3 State 2 negative impacts of overhead electrical cables. (2)

2.4 Give two positive uses for electromagnetic induction. (2)

[17]

Question 3

Grade 11 learners at a secondary school want to make an electric heater using one of two wires: P or Q.

They conduct experiments using the following materials:

- 6 V battery
- voltmeter
- ammeter
- rheostat
- wires P and Q
- conducting wires

3.1 Draw a circuit diagram to show how the learners must use the above materials to determine the resistances of P and Q. (4)

3.2 What is the purpose of the rheostat? (2)

3.3 State Ohm's law in words. (2)

3.4 Other than temperature, write down two other factors the learners should consider to make sure the test is fair when choosing which wire, P or Q, to use. (2)

3.5 The learners obtained the following graphs after performing the experiments.

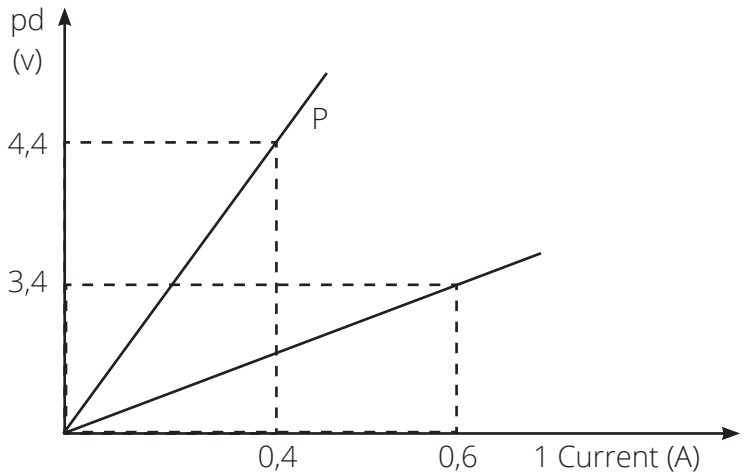

Assuming all other factors were kept constant, state which of the two wires will be the most suitable to use in the heater. Use suitable calculations to show clearly how you arrive at your answer. (7)

[17]

Question 4

Consider the following circuit diagram down below:

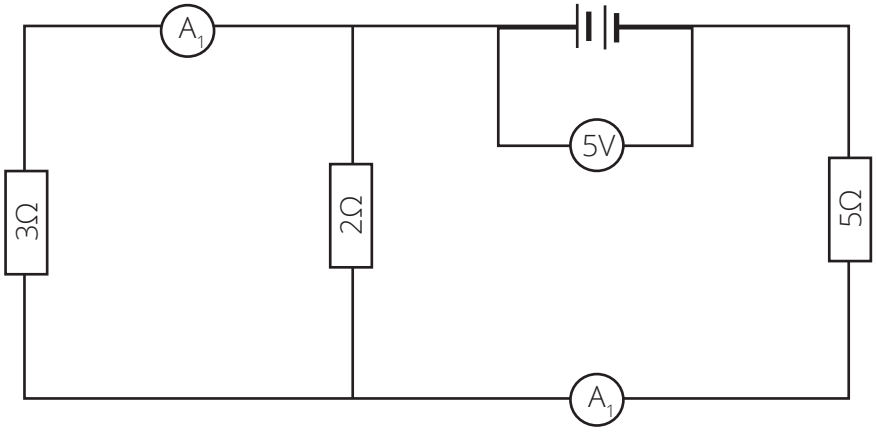

4.1 Calculate the total resistance in the circuit. (5)

4.2 Calculate the potential difference across the 5 Ω resistor. (3)

The 2 Ω resistor is now replaced by a current carrying conductor.

4.3 What is the reading on A_1? (2)

4.4 Explain the value of the reading on A_1. (2)

[12]

Question 5

House A has a 40 W light bulb and a 60 W extractor fan connected in series in the bathroom.
House B has a 40 W light bulb an a 60 W extractor fan connected in parallel in the bathroom.

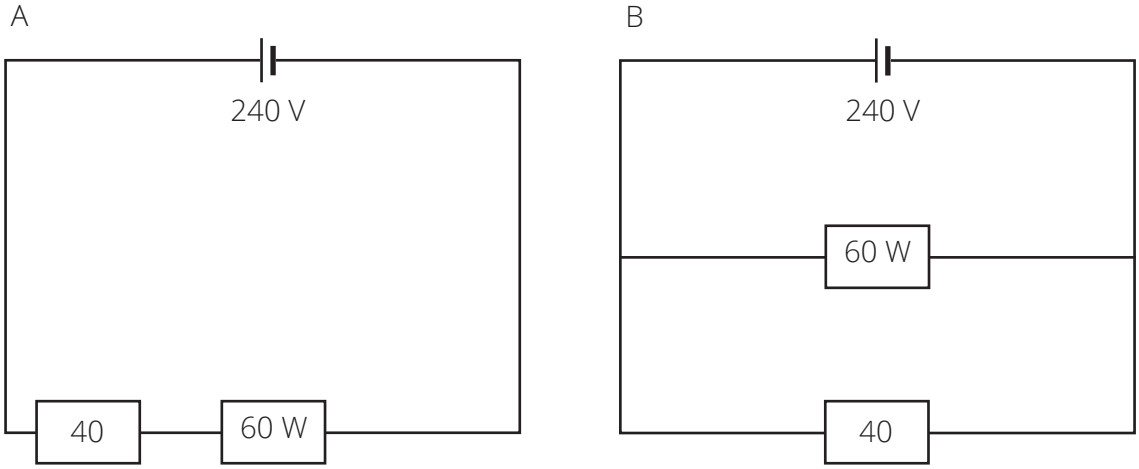

On average the light and extractor fan in both houses are switched on for 4 hours per day.
The cost per kWh is R1,20.

5.1 Calculate the cost for the use of the light and the fan during the 4 hours in house A. (5)

5.2 How will the electricity bill for the bathrooms in house A and House B compare? (1)

5.3 Calculate the resistance of the cicuit in house A. (4)

5.4 Calculate the total current of the circuit in house B. (4)

[14]

Question 6

An investigation was done to determine the relationship between the pressure and volume of a fixed mass of oxygen gas. The table below shows the results of the investigation.

Pressure (kPa)	**Volume (cm^3)**
200	20,00
400	10,00
800	5,00
x	2,00

6.1 Write down a hypothesis for this investigation. (2)

6.2 Identify TWO controlled variables in this investigation. (2)

6.3 Use mathematical symbols to write down a relationship between the variables shown in the table. (2)

6.4 Identify the gas law that is being investigated here. (1)

6.5 Calculate the value of *x* in the table. (3)

6.6 State 2 differences between ideal gasses and real gasses. (2)

6.7 Write down TWO conditions under which oxygen gas will deviate from ideal gas behaviour. (2)

[14]

Question 7

The following graph shows a potential energy diagram for the reaction A + B → C + D.

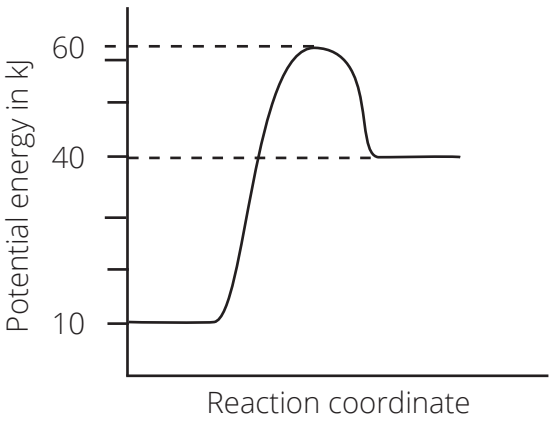

7.1 Is the forward reaction endothermic or exothermic? Motivate your answer. (3)

7.2 Calculate ΔH for the forward reaction. (2)

7.3 Define activation complex. (2)

7.4 What is the energy of the activated complex? (1)

7.5 Define activation energy. (2)

7.6 A catalyst is now added to the reaction. Explain what a catalyst does and why it is added to chemical reactions. (2)

7.7 How does the catalyst influence the reverse reaction? (2)

7.8 Redraw the graph to indicate the mechanism of how a catalyst will influence the reaction. (2)

[16]

Total: [100]

Exemplar Assessments

Time: 2 hours

Final Examination Paper 1

Name: **Surname:**

Instructions and information

1. This question paper consists of 7 questions.
2. Start EACH question on a NEW page.
3. Number the answers correctly according to the numbering system used in this question paper.
4. Leave ONE line between two sub questions, for example between QUESTION 2.1 and QUESTION 2.2.
5. You may use a non-programmable calculator. You may use appropriate mathematical instruments.
6. Show ALL formulae and substitutions in ALL calculations.
7. Round off your FINAL numerical answers to a minimum of TWO decimal places.
8. Give brief motivations, discussions, et cetera where required.
9. Write neatly and legibly.

Question 1

Multiple choice: Write down the letter of the correct answer next to the question number.

1.1 Which one of the following vector diagrams shows the resultant force correct for two forces working in on a body?

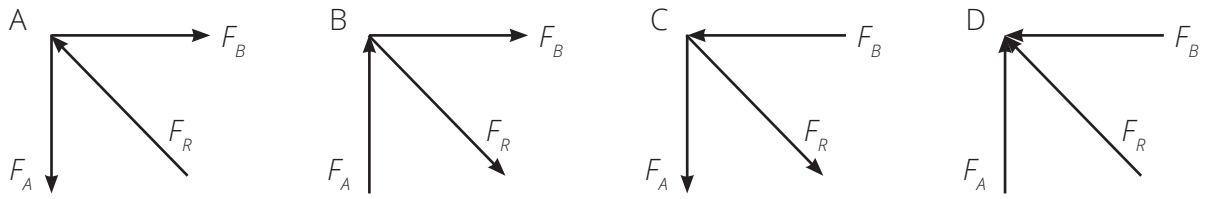

(2)

1.2 A book lies stationary on a table. Which of the following forces form a Newton III force pair?

A The force the book exerts on the table and the normal force on the book.

B The normal force on the book and the weight of the book.

C The weight of the book and the weight of the table.

D The normal force on the book and the normal force on the table. (2)

1.3 The gravitational acceleration of a ball on Earth is directly proportional to ...

A M_{Earth}

B m_{ball}

C r^2

D G (2)

1.4 Two charges, Q_1 and Q_2, exert an electrostatic force F on each other. Charge Q_2 is now doubled and the distance between the charges is also doubled. The force Q_2 now exerts on Q_1 ...

A has doubled.

B remains the same.

C has halved.

D is four times greater. (2)

1.5 The diagram shows a straight current-carrying conductor placed as if the current is entering the page.

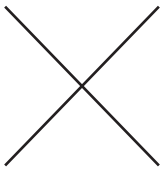

Which of the following statements is FALSE?

A The current in the conductor induces an electric field around it.

B The conventional current in the conductor moves into the page.

C The direction of the magnetic field around the conductor is clockwise.

D A compass placed next to the conductor will indicate south. (2)

[10]

Question 2

Three magnets work in on a metal ball. Magnet A exerts a force of 5 N, magnet B a force of 2 N and magnet C a force of 4 N on the ball as shown in the diagram.

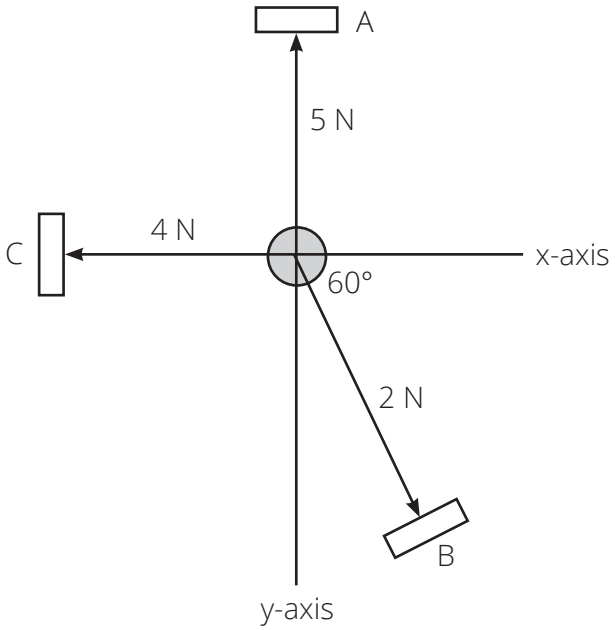

2.1 Calculate the x and y components of the 2 N force. (5)

2.2 Calculate the net force of the magnets on the ball. (9)

[14]

Question 3

A man pulls a 50 kg bag up a rough ramp that forms a 30° angle with the horizontal. The bag accelerates at 0,5 $m \cdot s^{-2}$. The coefficient of kinetic friction between the bag and the ramp is 0.4.

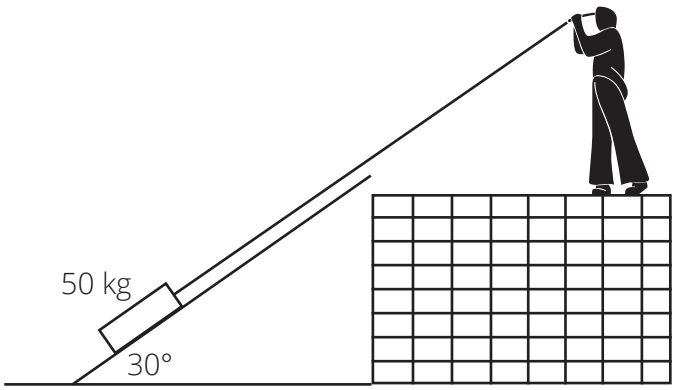

3.1 Draw a free body diagram of all the forces working in on the bag. (4)

3.2 Calculate the friction on the bag. (6)

3.3 Calculate the tension in the rope. Regard the rope as inelastic and with negligent mass. (8)

3.4 State Newton's Second Law in words. (2)

3.5 Predict if the frictional force will increase or decrease when the angle between the horizontal and the ramp increases. Explain how you made the prediction. (4)

[24]

Question 4

A satellite orbits Earth at a height equal to the radius of Earth. At this height, the gravitational force on the satellite is 4 410 N.

4.1 Define 'gravitational force'. (2)

4.2 State Newton's universal gravitational law. (2)

4.3 The mass of the Earth is 6 × 1024 kg and the radius of the Earth is 6,4 × 106 m. Calculate the mass of the satellite. (4)

4.4 Will the gravitational force exerted on the satellite increase, decrease or remain the same if the mass of the satellite is halved? (1)

4.5 Calculate with which factor the force between the Earth and the satellite will change if the mass of the satellite is four times greater and the distance between the surface of the Earth and the satellite doubles. (3)

4.6 Prove that a 2 kg rock and a 20 kg rock will experience the same gravitational acceleration when they are dropped from the same height above the surface of the Earth and air friction is ignored. (3)

[15]

The nucleus of an hydrogen atom has a charge of $3{,}2 \times 10^{-19}$ C. At a certain moment the electrons around the nucleus are spaced as shown in the diagram.

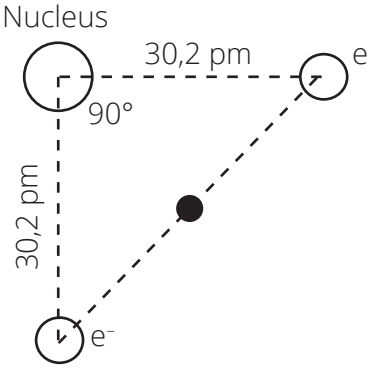

5.1 Draw the electrostatic field around a positive point charge. (2)

5.2 Define Coulomb's Law. (2)

5.3 Define an electric field. (2)

5.4 Point P lies halfway between the two electrons. Calculate the electrical field strength at point P. (6)

[12]

Question 6

The north end of a bar magnet is passed from left to right through the coils of a solenoid. The solenoid is connected to a sensitive galvanometer, which is able to register the direction of a current when it flows.

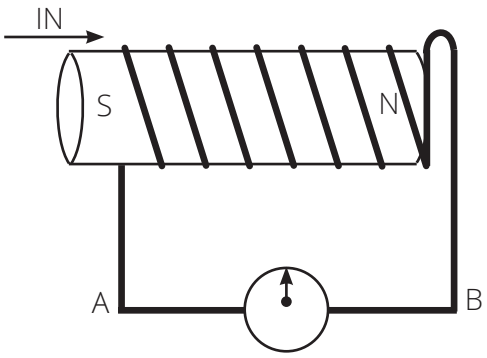

6.1 When the north pole of the bar magnet is introduced into the coil of the solenoid, a current flows in the solenoid.

6.1.1 Explain why a current is induced in the solenoid when the bar magnet is moved relative to the solenoid. (2)

6.1.2 Which law accounts for the induction of *emf*, and thus current? (1)

6.1.3 In which direction does the current flow through the galvanometer: from A to B, or from B to A? (1)

6.1.4 Which law is used to determine the direction in which the current flows? (1)

6.2 The bar magnet is pulled out of the solenoid on the right-hand side. In which direction will the current now flow through the galvanometer: from A to B or from B to A? (1)

6.3 A solenoid is one of the main components of an electromagnet.

6.3.1 Give TWO modifications that can be made to the solenoid above to convert it into an electromagnet. (2)

6.3.2 What is the advantage of an electromagnet? (1)

[9]

Question 7

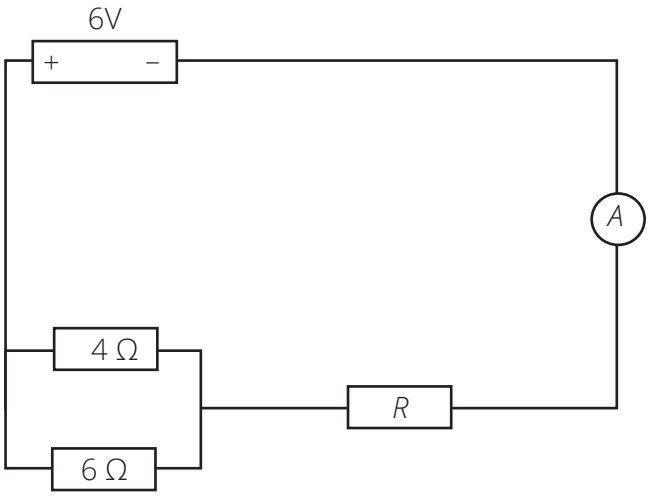

7.1 State Ohm's law in words. (2)

7.2 If the current through the 6 Ω resistor is 0,6 A, calculate the following quantities:

7.2.1 The current through the 4 Ω resistor (4)

7.2.2 The total current in the circuit (2)

7.2.3 The value of the resistor *R*. (3)

7.3 Define power. (2)

7.4 Calculate the power rating of the resistor *R*. (3)

[16]

Total: [100]

Exemplar Assessments

Time: 2 hours

Final Examination Paper 2

Name: **Surname:**

Instructions and information

1. This question paper consists of 10 questions.
2. Answer ALL the questions.
3. Start EACH question on a NEW page.
4. Number the answers correctly according to the numbering system used in this question paper.
5. Leave ONE line between two sub questions, for example between QUESTION 2.1 and QUESTION 2.2.
6. You may use a non-programmable calculator. You may use appropriate mathematical instruments.
7. Show ALL formulae and substitutions in ALL calculations.
8. Round off your FINAL numerical answers to a minimum of TWO decimal places.
9. Give brief motivations, discussions, et cetera where required.
10. Write neatly and legibly.

Question 1

Multiple choice: Write down the letter of the correct answer next to the question number.

1.1 The following diagram shows the changes in the potential energy of 2 atoms as they near each other.

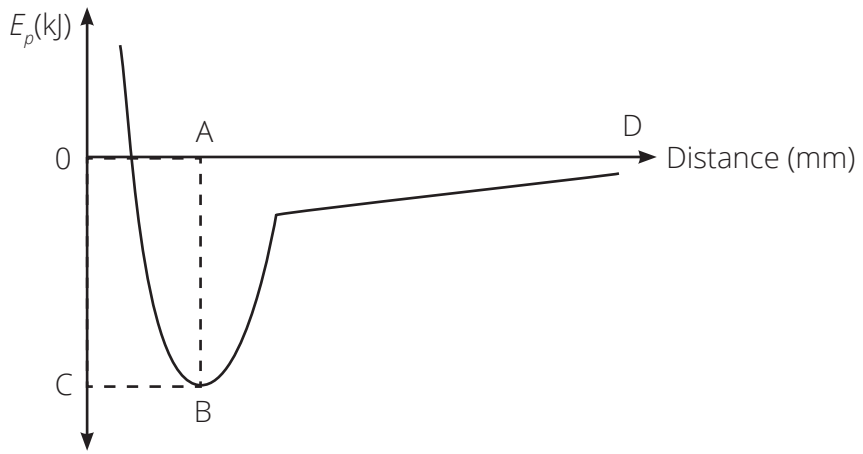

The forces of repulsion between the atoms are the dominant force ...

A at point B.

B between point C and B.

C at A.

D between point A and D. (2)

1.2 Which of the following molecules have the most electron lone pairs?

A CO_2

B N_2

C HOCl

D Cl_2 (2)

1.3 Which of the following statements is true for intra-molecular bonds?

A The higher the bond order the longer the bond length and the greater the bond energy.

B The higher the bond order the shorter the bond length and the greater the bond energy.

C The higher the bond order the shorter the bond length and the less the bond energy.

D The higher the bond order the longer the bond length and the less the bond energy. (2)

1.4 Which of the following shows the correct oxidation number for nitrogen in each molecule?

	NO_2	NO	NO_3^-
A	-2	+2	+2
B	-4	+2	+3
C	+2	-2	-3
D	+4	+2	+5

(2)

1.5 Which of the following is not a property of ideal gases at –273 K? The particles ...

A have no volume

B have no kinetic energy

C have no mass

D exert no pressure (2)

[10]

Question 2

Oxygen gas reacts with hydrogen gas to form water molecules.

$O_2(g) + H_2(g) \rightarrow H_2O(g)$

2.1 Define a molecule. (2)

2.2 Draw Lewis structures for:

2.2.1 O_2 (2)

2.2.2 H_2 (2)

2.2.3 H_2O (2)

2.3 Hydrogen chloride ionises in water to form hydronium and chlorine ions.

$HCl(g) + H_2O(l) \rightarrow H_3O^+(aq) + Cl^-(aq)$

2.3.1 Draw the Lewis structure of a H_3O^+-ion. (2)

2.3.2 What type of bond is responsible for the formation of H_3O^+-ions? (1)

2.3.3 Describe the difference between covalent bonds and the type of bond that forms in question 2.3.2. (2)

[13]

Question 3

Intermolecular forces between molecules influence the boiling point of liquids. The table below gives the boiling points of different substances.

Liquid	Boiling point (°C)
F_2	-188
CH_4	-164
Cl_2	-34,6
H_2O	100
Solution of NaCl and H_2O	101

3.1 Draw the Cooper structure of CH_4. (2)

3.2 What shape is a CH_4 molecule? (1)

3.3 Calculate the difference in electronegativity between C and H in the CH_4 molecule. (2)

3.4 Is CH_4 polar or non-polar? (1)

3.5 Motivate your answer to question 3.4. (2)

3.6 Why is the boiling point for Cl_2 higher than that of F_2? (2)

3.7 Explain why the boiling point of a solution of NaCl and H_2O is higher than pure H_2O. (5)

[15]

Question 4

The following results are summarised from an experiment that was conducted to determine the relationship between the pressure and volume of a fixed mass of gas. The results are summarised in the table below.

p (kPa)	V (cm^3)
105,0	30
126,0	25
157,6	20
21,0	150

4.1 Draw sketch graphs of pressure versus 1/volume. (3)

4.2 Name the factor that should be kept constant in this experiment. (1)

4.3 State a suitable conclusion for this experiment. (2)

4.4 Name and state the law that was being verified in this experiment. (3)

[9]

Question 5

It is illegal for athletes to take nandrolone to improve their performance. Nandrolone consists of 78,83% C; 9,49% H and 11,68% O.

5.1 Calculate the empirical formula of nandrolone. (6)

5.2 The molecular mass for nandrolone is 274 $g \cdot mol^{-1}$. What is the molecular formula for nandrolone? (3)

[9]

Question 6

The Ostwald process is an industrial process used to manufacture nitric acid. One of the stages in this process involves a reaction between ammonia gas and oxygen gas. The reaction is:

$4NH_3(g) + 5O_2(g) \rightarrow 4NO(g) + 6H_2O(l)$. In one such reaction, 500 g of ammonia gas and 500 g of oxygen gas are mixed.

6.1 Determine whether ammonia or oxygen is the limiting reactant by means of calculations. (5)

6.2 The actual mass of NO(g) obtained is 210 g. Calculate the percentage yield of the NO(g). (4)

[9]

Question 7

A 50 g sample of seashells is heated until no CO_2 is liberated. The remaining sample's mass is determined to be 30g.

$CaCO_3(s) \rightarrow CaO(s) + CO_2(g)$

7.1 How many CO_2 molecules were liberated? (5)

7.2 Calculate the percentage purity $CaCO_3$ in the seashells. (6)

[11]

Question 8

The graph below represents the change in potential energy for a certain reaction.

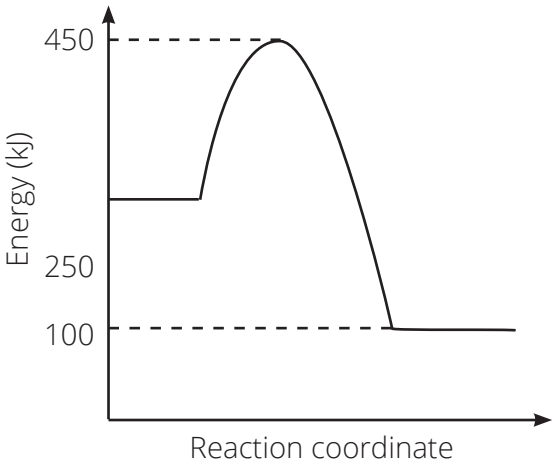

8.1 Is the reaction ENDOTHERMIC or EXOTHERMIC? (1)

8.2 Calculate the enthalpy change for the reaction. (3)

8.3 Calculate the value of the activation energy for the reverse reaction. (2)

8.4 State the value of the heat of reaction for the forward reaction. (1)

[7]

Question 9

Sulphuric acid is a strong acid and reacts with water in two steps as shown in the reactions below.

$H_2SO_4 + H_2O \rightarrow HSO_4^- + H_3O_+$

$HSO_4^- + H_2O \rightarrow SO_4^{2-} + H_3O^+$

9.1 What is meant by the term diprotic acid? (2)

9.2 Identify the ampholyte in the above equations. (1)

9.3 Write down any one of the conjugate acid-base pairs in the first reaction. Clearly identify the acid and the base. (2)

9.4 Give an example of any salt that will form with the acid in the second reaction. (1)

9.5 What colour will bromothymol blue be if it is added to the second reaction? (1)

[7]

Question 10

The following reaction is an example of a redox reaction:

$FeCl_3$ (aq) + H_2 (g) $\rightarrow$ $FeCl_2$ (aq) + HCl (aq)

10.1 Write down the ...

10.1.1 definition of reduction in terms of electron transfer. (2)

10.1.2 formula of the substance that is reduced, explaining the answer in terms of oxidation numbers. (3)

10.2 Balance the net reaction by using the Table of Standard Reduction potentials. (5)

[10]

Total: [100]

Exemplar Assessments

Time: 2 hours

Control Test Term 2

MEMORANDUM

[ticks to follow after given answers and mark allocations to be right aligned]

1.1 B ✓✓ (2)

1.2 A ✓✓ (2)

1.3 A ✓✓ (2)

1.4 B ✓✓ (2)

1.5 C ✓✓ (2)

[10]

2.1.1 Very strong dipole-dipole attraction between molecules in which the H atom is bonded to a small and very highly electronegative atom, such as nitrogen, oxygen or fluorine. ✓✓ (2)

2.2.2 Very weak intermolecular forces between non-polar molecules. Induced dipole - induced dipole forces. ✓✓ (2)

2.2.3 Strong intermolecular forces between two polar molecules ✓✓ (2)

2.2 A: H_2S ✓; B:H_2O ✓; C: CH_4 ✓ (3)

2.3 H_2O has the highest boiling point. Intermolecular forces are strong ✓ hydrogen bonds. ✓ A lot of energy ✓ needed to break the bonds and therefor the boiling point is high. CH_4 has London forces ✓ between molecules. Forces very weak ✓ and low amounts of energy ✓ needed to break the bonds and therefor the boiling point is low. H_2S molecules are dipoles. Dipole-dipole forces ✓ between the molecules. Bonds are not as strong as hydrogen bonds but stronger than London forces. ✓ Less energy needed to break bonds than hydrogen bonds but more energy needed than for London forces. ✓ (9)

[18]

3.1 $M(C_6H_{12}O_6) = 6(12) + 12(1) + 6(16) = 180\ g{\cdot}mol^{-1}$ ✓

$n = \frac{m}{14}$ ✓

$n = \frac{50}{180}$ ✓

$n = 0{,}28^{mol}$ ✓

$C = \frac{n}{v}$ ✓

$C = \frac{0{,}28}{0{,}3}$ ✓

$C = 0{,}93^{mol{\cdot}dm{-}3}$ ✓ (7)

3.2 $C_6H_{12}O_6 + 6O_2$ ✓$\rightarrow 6CO_2 + 6H_20$✓ (✓ balancing) (3)

3.3 1 mol $C_6H_{12}O_6$: 6 mol O_2✓

0,28 mol $C_6H_{12}O_6$: 0,28 6 O_2 ✓= 1.06 mol O_2✓ (3)

3.4 1 mol $C_6H_{12}O_6$: 6 mol CO_2

0,28 mol $C_6H_{12}O_6$: 1.06 mol CO_2✓

1.06 × 22,4 ✓ = 23, 74 dm^3 ✓ (3)

[16]

4.1 $n = \frac{m}{M} = n = \frac{85,71}{14} = 7,143$ mol

$n = \frac{m}{M} = n = \frac{14,29}{1} = 14,29$ mol

	C	:	H
	7,143	:	14,29 ✓
(÷7,143)✓	1	:	2

Empirical formula: CH2✓ (5)

4.2 $M(CH_2)$ =12 = 2(10) = 14 $g.mol^{-1}$ ✓

$\frac{42}{14} = 3$

Molecular formula = C_3H_6✓ (3)

[8]

5.1 The reactant that is completely used up during a chemical reaction ✓✓ (2)

5.2.1 $n_1 = \frac{m}{M}$

$n_1 = \frac{16,7}{286} = 0,06$ mol ✓

$n_2 = \frac{11,2}{28} = 0,4$ mol ✓

But 0,06 mol of I_2O_2 would require 0,12 mol of CO. ✓✓

Since there are 0,4 mol of CO, then I_2O_2 is the limiting reactant. ✓ (5)

5.2.2 Excess mols = 0,4 – 0,12 ✓ = 0,28 mol ✓ m = nM ✓ = 0,28 × 28 = 7,84 g ✓ (4)

[11]

6.1 $\frac{31,9}{49,9} \times 100$ ✓ = 63,93 mol ✓ (2)

6.2 $M(CuSO_4)$ = 63,5 + 32 + 4(16) = 159,5 $g{\cdot}mol^{-1}$ ✓

$n = \frac{m}{M}$ ✓ $= \frac{31,9}{159,5}$ ✓ = 0,2 mol✓ (4)

6.3 49,90 – 31,90 = 18 g✓

$n = \frac{m}{M(H_2O)}$ 11✓ $= \frac{18}{18}$ ✓ = 1 mol✓ (4)

0,2 mol $CuSO_4$: 1 mol H_2O✓

(× 5) ✓ 1mol $CuSO_4$:5 mol H_2O

x = 5 ✓ (6)

6.4 $n = \frac{N}{N_A}$

$1 = \frac{N}{6,02 \times 10^{25}}$

$N = 6,02 \times 10^{23}$ molecules ✓✓ (2)

[14]

7.1 The electrostatic force of repulsion or attraction between two point charges is directly proportional to the product of the magnitude of the charges and inversely proportional to square of the between their centres. ✓✓ (2)

7.2 $F = \frac{kQ_2Q_2}{286}$ ✓

25×10^{-6} ✓ $= \frac{9 \times 10^9 \times 3 \times 10^{-6} \times 4 \times 10^{-6}}{0{,}1^2}$ ✓(Q_2)

$Q_2 = 3{,}47 \times 10^{-9}$ C or 3,47 nC ✓ (5)

[7]

8. Electrostatic force per unit positive charge placed at the point ✓ (1)

8.2 The loss of electrons, ✓ resulting in the amount of protons exceeding the amount of electrons. (1)

8.3 Left to right ✓ (1)

8.4 $E = \frac{F}{Q}$ ✓

$20\ 000 = \frac{F}{2 \times 10^{-9}}$ ✓

F = 4 × 10–5 N ✓ repulsive ✓ (4)

8.5 $E = \frac{kQ}{r^2}$ ✓

$20\ 000 = \frac{(9 \times 10^9) \times (8 \times 10^{-9})}{r^2}$ ✓

$r = 0{,}06^m$ ✓ (3)

8.6

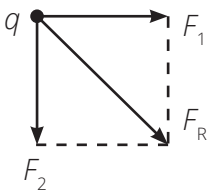

$F_R^2 = F_1^2 + F_2^2$

$= (4 \times 10^{-5})^2$ ✓$+ (6 \times 10^{-5})^2$ ✓

$= 5{,}2 \times 10^{-9}$

F_R = 7,2 × 10–5 N ✓

$\tan\theta = \frac{6 \times 10^{-5})}{4 \times 10^{-5}}$ ✓

θ = 56,31° from the positive x-axis to the negative y-axis ✓ (6)

[16]

Total: [100]

Exemplar Assessments

Time: 2 hours

Control Test Term 3

MEMORANDUM

[ticks to follow after given answers and mark allocations to be right aligned]

1.1 C ✓✓ (2)

1.2 C✓✓ (2)

1.3 A✓✓ (2)

1.4 B✓✓ (2)

1.5 B✓✓ (2)

[10]

2.1.1

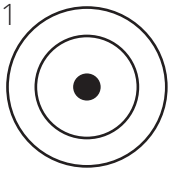

✓ shape

✓ direction

(2)

2.1.2 The Right Hand Rule ✓✓ (2)

2.2.1 The induced emf in a circuit is equal to the rate of change of the magnetic flux through the circuit. ✓✓ (2)

2.2.2

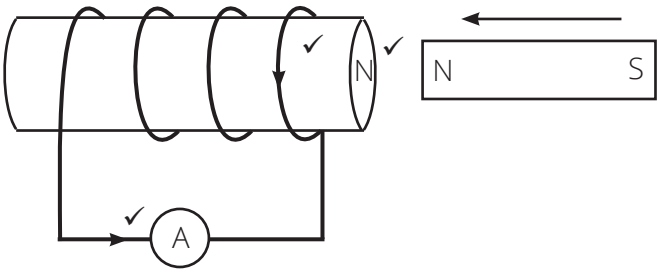

(3)

2.2.3

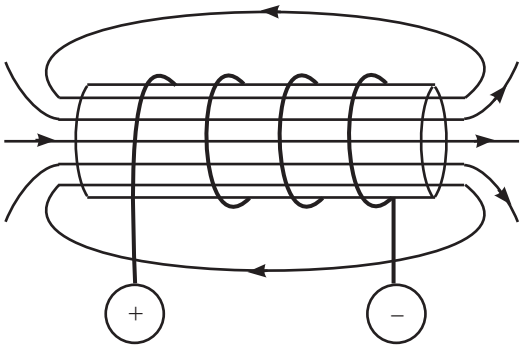

✓ Shape

✓ Arrows from North to South

(2)

2.2.4 The direction of the magnetic field changes so that the north pole becomes the south pole ✓and the current flows in the opposite direction. ✓ (2)

2.3 Birds are sometimes electrocuted.

- Land that can be used for agriculture, housing or other economic activities is used for pylons.
- Natural habitats are negatively influenced. ✓✓ (2)

2.4 Generation of electrical power and electromagnets. ✓✓ (2)

[17]

3.1

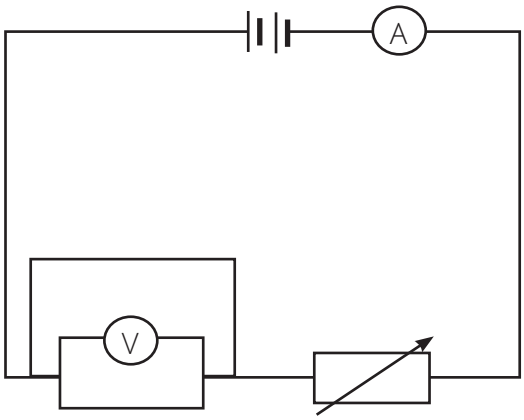

✓ Battery; ✓ Ammeter; ✓ Voltmeter; ✓ Rheostat (4)

3.2 To control the resistance in the circuit without interrupting the flow of current (changing the resistance also has the effect of changing the current/voltage in the circuit). ✓✓ (2)

3.3 The potential difference across an electrical conductor is directly proportional to the current through the conductor if the temperature is kept constant. ✓✓ (2)

3.4 Type of material of which the wire is made.✓ Thickness of the wire ✓ (2)

3.5 $R_p = \frac{\Delta V}{\Delta i}$ ✓ $= \frac{4,4}{4}$ ✓ $= 11\Omega$ ✓

$R_Q = \frac{\Delta V}{\Delta i}$ ✓ $= \frac{3,4}{0,6}$ ✓ $= 5,67\Omega$ ✓

Wire P has a higher resistance✓and would therefore be more suitable for a heater. ✓ (7)

[17]

4.1 $\frac{1}{R_p} = \frac{1}{R_1} = \frac{1}{R_2}$ ✓ $= \frac{1}{2} + \frac{1}{3} = \frac{5}{6}$ ✓

$R_p = \frac{6}{5} = 1,2\ \Omega$ ✓

$R_T = 1,2 + 5$ ✓ $= 6,2$ ✓ (5)

4.2 $V_p:V_s = 1,2:5$ ✓

$V_s = \frac{5 \times 5}{6,2}$ ✓ $= 4,03$ V ✓ (3)

4.3 0 A ✓✓ (2)

4.4 Replacing the 2 Ω resistor causes a short circuit ✓✓ with no current going through the 3 Ω resistor. (2)

[12]

5.1 $E = P\Delta t$ ✓ $= (0,04 + 0,06)$ ✓ $(4) = (0,4$ kW·h ✓

Total cost = E × unit cost = 0,4 × 120 ✓ = 48 c ✓ (5)

5.2 The same ✓ (1)

5.3 $P = \frac{V^2}{R}$

$100 = \frac{240^2}{R}$ ✓

R = 576 Ω ✓ (4)

5.4 $P = IV$ ✓

100 ✓ = I(240) ✓

I = 0,42 A ✓ (4)

[14]

6.1 Any hypothesis that relates the two variables, for example: The volume of a fixed mass of oxygen gas ✓ is directly proportional to the pressure of the gas. ✓OR The volume of a fixed mass of oxygen gas is inversely proportional to the pressure of the gas. (2)

6.2 Temperature ✓ and mass ✓ of oxygen gas (2)

6.3 $p \alpha \frac{1}{V}$ or $V \alpha \frac{1}{p}$ ✓✓ (2)

6.4 Boyle's law ✓ (1)

6.5 $p_1V_1 = p_2V_2$ ✓

(200 kPa)(20,00 cm^3) = x(2,00 cm^3) ✓x = 2 000 kPa ✓ (3)

6.6 The molecules of real gasses have measurable volume. ✓

The molecules of a real gas attract each other because of intermolecular forces. ✓ (2)

6.7 High pressure ✓ and low temperature ✓ (2)

[14]

7.1 Endothermic.✓ The energy of the products is higher than the products of the reactants. ✓✓ (3)

7.2 $\Delta H = E_P - E_R$ ✓= 40 -10 = 30 kJ ✓ (2)

7.3 An unstable temporary arrangement of atoms that forms just before atoms start to combine to form products.✓✓ (2)

7.4 60 kJ ✓ (1)

7.5 The minimum energy that must be absorbed by a system to cause it to react. ✓✓ (2)

7.6 A catalyst lowers activation energy ✓ to increase the rate of the reaction. ✓ (2)

7.7 It increases the rate of the reverse reaction. ✓✓ (2)

7.8

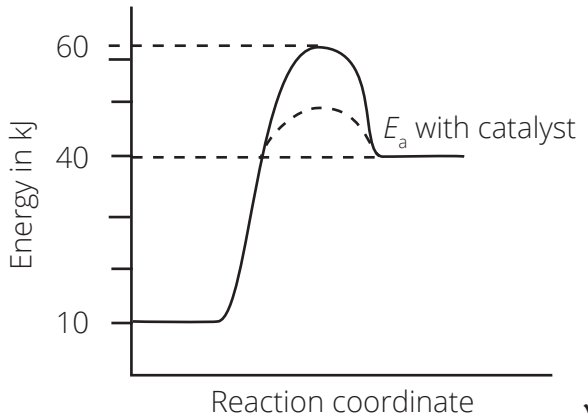

✓✓ (2)

[16]

Total: [100]

Exemplar Assessments

Time: 2 hours

Final examination paper 1

MEMORANDUM

1.1 D✓✓ (2)

1.2 A✓✓ (2)

1.3 A✓✓ (2)

1.4 C✓✓ (2)

1.5 A✓✓ (2)

[10]

2.1 $F_x = \cos\theta\ F_A$ ✓

$F_x = \cos(60°)\ 2$ ✓

$F_x = 1$ N right ✓

$F_y = \sin\theta\ F_A$ ✓

$F_y = \sin(60°)2$

$F_y = 1.73$ N down ✓ (5)

2.2 $F_x = F_c + F_{Bx} = -4+1 = 3$ N left ✓

$F_y = F_A + F_{By} = 5 - 1{,}73 = 3{,}27$ N up ✓

$F_R^2 = F_x^2 + F_y^2$ ✓ $= 3^2 + (3{,}27)^2$ ✓ $= 19{,}69$ N ✓

$\tan\theta = \frac{F_x}{F_y}$ ✓ $= \frac{3}{3{,}27}$ ✓ $= 42{,}53°$ ✓

$360° - 42{,}53°$ ✓ $= 317{,}47°$ ✓ (9)

[14]

3.1

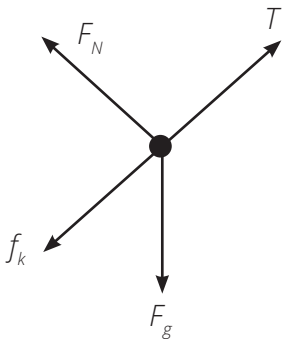

✓✓✓✓

One mark for each correct force and label (4)

3.2 $F_\perp = \cos\theta\ F_g$ ✓ $= \cos(30°)(50)(9{,}8)$ ✓ $= 424{,}35$ N ✓

$f_k = \mu N$ ✓ $= (0{,}4)(424{,}35)$ ✓ $= 169{,}74$ N down the slope ✓ (6)

3.3 $F_{//} = \sin\theta\ F_g$ ✓ $= \sin(30°)(50)(9{,}8)$ ✓ $= 245$ N

$F_{NET} = ma$ ✓ $= (50)(0{,}5)$ ✓ $= 25$ N

$F_{NET} = F_T + f_k + F_{//} = 25$ ✓

$F_T - 169{,}74$ ✓ -245 ✓

$F_T = 439{,}74$ N ✓ (8)

3.4 When a net force, F_{NET}, is applied to an object of mass *m*, the object accelerates in the direction of the net force. The acceleration, *a*, is directly proportional to the net force and inversely proportional to the mass. ✓ ✓ (2)

3.5 Decrease. ✓ $F_{\perp}$ decreases when cos θ increases. ✓ $F_{\perp} = F_N$ ✓and F_N α f_k. ✓ (4)

[24]

4.1 The force of attraction that exists between any two objects in the Universe ✓✓ (2)

4.2 Any two bodies in the Universe will attract each other with a force that is directly proportional to the product of the masses of the bodies and inversely proportional to the square of the distance between them. ✓✓ (2)

4.3 $F = \frac{Gm_1m_2}{r^2}$ ✓

$4\,410 = \frac{(6{,}7 \times 10^{-11})(m_2)(6 \times 10^{24})}{(6{,}4 \times 10^6 + 6{,}4 \times 10^6)^2}$ ✓ ✓

m_S = 1 797,35 kg ✓ (4)

4.4 Decrease ✓ (1)

4.5 $F_{NEW} = \frac{F \times 4}{(\frac{3}{2})^2}$ ✓ ✓ $= \frac{16}{9}$ F, factor = $\frac{16}{9}$ ✓ (3)

4.6 $F_g = mg$ ✓

$F_g = \frac{GmM}{r^2}$ ✓

$g = \frac{GM}{r^2}$ ✓ (3)

[15]

5.1

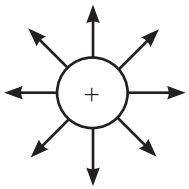

✓ Shape

✓ Direction

(2)

5.2 The force of attraction or repulsion exerted by one point charge on another point charge is directly proportional to the product of the magnitude of the charges and inversely proportional to the square of the distance between them. ✓✓ (2)

5.3 An electric field is a region of space in which an electric charge experiences a force. ✓✓ (2)

5.4 $x(_{+\rightarrow P}) = \sin\theta\ x(_{+\rightarrow e^-}) = \sin(45°)(30{,}2\times10^{-12})$ ✓$= 2{,}26 \times 10^{-12}$ m

$E = \frac{kQ}{r^2}$ ✓$= \frac{9 \times 10^9(3{,}2 \times 10^{-19})}{(2{,}26 \times 10^{-12})^2}$ ✓ ✓ $= 5{,}64 \times 10^{14}$ N.C-1 ✓ from the nucleus towards point P✓ (6)

[12]

6.1.1 Introducing the magnet changes the magnetic flux linkage with the solenoid. ✓ In order to oppose the change in magnetic flux linkage a current will flow to create an opposing magnetic field. ✓ (2)

6.1.2 Faraday's law of electromagnetic induction ✓ (1)

6.1.3 B to A ✓ (1)

6.1.4 Right-hand rule ✓ (1)

6.2 A to B ✓ (1)

6.3.1 Connect a direct current electrical supply in the place of the galvanometer. ✓ Insert a soft iron core in the solenoid. ✓ (2)

6.3.2 It can be switched on and off. ✓ OR The strength of the electromagnet can be changed. (1)

[9]

7.1 The potential difference across a conductor is directly proportional to the current through it at constant temperature. ✓✓ (2)

7.2.1 $V = IR$ ✓ $= 0{,}6 \times 6$ ✓ $= 3{,}6V$

$I = \frac{V}{R} = \frac{3{,}6}{4}$. ✓ $= 0{,}09A$. ✓ (4)

7.2.2 $I = 0{,}9 + 0{,}6 = 1{,}5\ A$✓✓ (2)

7.2.3 $V = 6 - 3{,}6 = 2{,}4\ V$✓

$I = \frac{V}{R} = \frac{2{,}4}{1{,}5}$. ✓ $= 1{,}6\Omega$ ✓ (3)

7.3 The rate at which electrical energy is transformed into other forms of energy. ✓✓ (2)

7.4 $P = I^2R$ ✓$= 1{,}5^2(1{,}6)$ ✓$=3{,}6$ W ✓ (3)

[16]

Total: [100]

Exemplar Assessments

Time: 2 hours

Final examination paper 2

MEMORANDUM

1.1 B✓✓ (2)

1.2 D✓✓ (2)

1.3 B✓✓ (2)

1.4 D✓✓ (2)

1.5 C✓✓ (2)

[10]

2.1 Two or more atoms chemically bonded through covalent bonding. ✓✓ (2)

2.2.1

✓✓ (2)

2.2.2 H:H ✓✓ (2)

2.2.3

✓✓ (2)

2.3.1

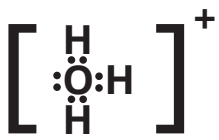

✓✓ (2)

2.3.2 Dative covalent bond. ✓ (1)

2.3.3 Covalent bonds exist between two atoms when each atom contributes one electron to form a shared pair. ✓

Dative covalent bonds form when a lone pair of one atom is shared with an empty orbital of another atom so that the electrons will be shared. ✓ (2)

[13]

3.1

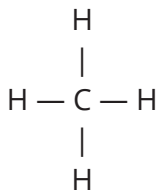

✓✓ (2)

3.2 tetrahedral ✓ (1)

3.3 ΔE = 2,5 – 2,1 = 0,4✓✓ (2)

3.4 Non-polar ✓ (1)

3.5 The molecule is symmetrical. ✓✓ (2)

3.6 The chlorine atom has a greater molecular mass.✓✓ (2)

3.7 In pure water hydrogen bonds exist ✓ between the molecules. In a solution of water and NaCl there are ion-dipole bonds✓ between water molecules and the Na^+ ions and water molecules and the Cl^- -ions.✓Ion-dipole bonds are stronger✓ than hydrogen bonds and will need more energy to break the bonds ✓ for the water to boil. (5)

[15]

4.1

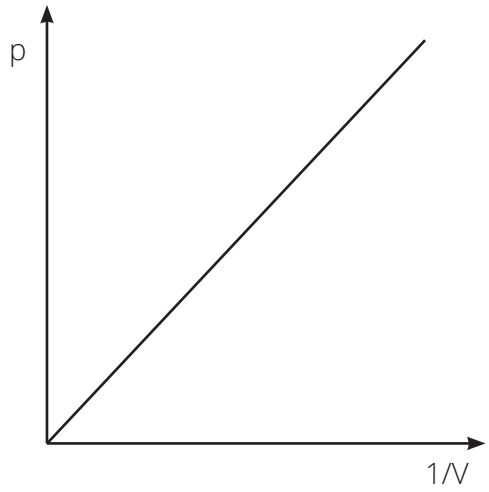

Vertical axis label ✓

Horizontal axis label ✓

Correct graph shape ✓

(3)

4.2 Temperature / mass of gas / number of moles of gas ✓ (1)

4.3 As the pressure increases the volume decreases at constant temperature. ✓✓ (2)

4.4 Boyles' law; ✓ the volume of a fixed mass of gas is inversely proportional to the pressure if temperature remains constant ✓✓ (3)

[9]

5.1 $n = \frac{m}{M}$ ✓

C: $\frac{78,83}{12}$ = 6,57 mol✓

H: $\frac{9,49}{1}$ = 9,49 mol✓

O: $\frac{11,68}{16}$ = 0,73 mol✓

C : H : O

6,57 : 9,49 : 0,73 (÷ 0,73) ✓

9 : 13 : 1

$C_9H_{13}O$✓ (6)

5.2 $M(C_9H_{13}O) = 9(12) + 13(1) + 16 = 137\ g{\cdot}mol^{-1}$✓

$\frac{274}{137}$ ✓ = 2

$C_{18}H_{26}O_2$✓ (3)

[9]

6.1 $n = \frac{m}{M} = \frac{500}{17}$ ✓ = 29,41 mol✓

$n = \frac{m}{M} = \frac{500}{32}$ = 15,63 mol✓

29,41 mol NH_3 needs $\frac{4}{5}$ (29,41 mol) = 36,76 mol O_2

15,63 mol O_2 needs $\frac{4}{5}$ (15,63 mol) = 12,50 mol NH_3

∴ O_2 is the limiting reactant ✓ (5)

6.2 12,50 mol will produce12,50 mol NO

$m = nM$ ✓ = (12,50)(30) ✓= 375 g NO

% yield = $\frac{210}{375} \times 100$ ✓ = 56% ✓ (4)

[9]

7.1 $n = \frac{m}{M} = \frac{50-30}{(12) + 2(16)}$ ✓ ✓ = 0,45 mol✓

$N = nN_a$ = (0,45)(6,02 × 10^{23}) ✓ = 2,709 × 10^{23} molecules ✓ (5)

7.2 Ratio: $CaCO_3 : CO_2$

1 : 1✓

0,45 : 0,45

$m = nM$ = (0,45) ✓ (100) ✓ = 45g✓

$\frac{45}{50} \times 100$ ✓ = 90 % ✓ (6)

[11]

8.1 Exothermic ✓ (1)

8.2 $\Delta H = E_{products} - E_{reactants}$ ✓= 100 – 250✓ = -150 kJ ✓ (3)

8.3 450 – 100 = 350 kJ ✓✓ (2)

8.4 - 150 kJ ✓ (1)

[7]

9.1 An acid that can donate 2 protons. ✓✓ (2)

9.2 $H_2SO_4^-$ ✓ (1)

9.3 H_2SO_4 (acid) and HSO_4^- (conjugate base) OR

H_2O (base) and H_3O^+ (conjugate acid) ✓ pair ✓ correctly identified (2)

9.4 Any SO_4 salt, e.g. $CaSO_4$ ✓ (1)

9.5 yellow ✓ (1)

[7]

10.1.1 Reduction is the gaining of electrons. ✓✓ (2)

10.1.2 Fe^{3+}.✓ Fe ion's oxidation number change from 3+ to 2+. A decrease in oxidation number ✓✓indicates that an electron was added to the substance. (3)

10.2 $Fe^{3+} + e^- \rightarrow Fe^{2+}$ ✓ (× 2)

$2Fe^{3+} + 2e^- \rightarrow 2Fe^{2+}$ ✓ ...1

$H_2 \rightarrow 2H^+ + 2e^-$ ✓ ...2

$2Fe^{3+} + H_2$ ✓$\rightarrow 2Fe^{2+} + 2H^+$ ✓ ... 1+2 (5)

[10]

Total: [100]

Pearson South Africa

At Pearson, home of ***Maskew Miller Longman*** and ***Heinemann,*** we're here to help people make progress in their lives through learning.

We work with teachers and learners to create and continually improve our wide range of products and services. We create content in all 11 official languages for learners from pre-school to Grade 12. Whether it's our trusted CAPS-approved textbooks, digital and supplementary resources, or professional development courses, we put the learner at the heart of everything we do.

Every day all over South Africa, our products and services help learning flourish – because wherever learning flourishes, so do people.

Also available:

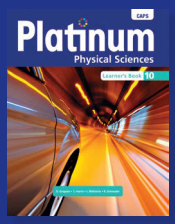

Browse and purchase Pearson eBooks at shop.**pearson.co.za**

Contact us
T: 021 532 6008
E: pearsonza.enquiries@pearson.com

Online Teacher Support
www.classroomsolutions.co.za

Learn more at za.pearson.com

http://za.pearson.com

E56F0D8B-3C8D-4959-88C2-593BDB71EAD3

ISBN 978-1-4857-2049-2

Pearson